1. 7:00 P.M. Regular City Council Meeting

Documents:

05-20-2020 AGENDA.PDF
COUNCIL PACKET FOR 05-20-2020.PDF

NOTICE OF PUBLIC MEETING

TO THE PUBLIC AND RESIDENTS OF VERNAL CITY: Notice is hereby given that the **VERNAL CITY COUNCIL** will hold an electronic meeting on **Wednesday, May 20, 2020 at 7:00 p.m.** in the Vernal City Council Chambers at 374 East Main St, Vernal, Utah.

A G E N D A

7:00 p.m. **OPENING CEREMONY**

1. Invocation or Uplifting Thought
2. Pledge of Allegiance

STANDING BUSINESS

1. Approval of the Minutes of May 6, 2020 Special Budget Meeting
2. Approval of the Minutes of May 6, 2020 Regular Meeting

PUBLIC BUSINESS

1. Request for Sponsorship of the Jr. Livestock Show – Nikki Long
2. Presentation Regarding the Possible Addition of Bike Lanes along SR-121 as Part of the UDOT Resurfacing Project – CIVCO Engineering

7:15 pm **PUBLIC HEARING**

1. FY2021 Budget - Mike Davis

POLICY AND LEGISLATION

1. Request for Approval of a Minor Subdivision for Tyler and Marilee Shiner for the Property Located at 261 West 500 South, Vernal, Utah – Allen Parker
2. Ratification of CARES Act Grant Agreement for $1,043,853 for Purposes of Operation and Maintenance of the Airport – Quinn Bennion
3. Consider Approval of Amendment No. 1 to Grant Agreement (AIP Grant No. 3-49-0037-037-2020) for the Reimbursement of the Airport Fence – Quinn Bennion
4. Consider Approval of an Interlocal Agreement with Naples City and Uintah County for Participation in a Joint Storm Water Drainage System Project – Resolution No. 2020-05 – Quinn Bennion
5. Consider Approval of a Statewide Utility License Agreement with UDOT for Use of the State's Right-of-Way for Utilities – Quinn Bennion
6. Ratification of City Employee's Health Insurance – Quinn Bennion
7. Discussion Regarding Exempt Employees (First Reading) – Resolution No. 2020-04 – Quinn Bennion
8. Update of COVID-19 Crisis – Quinn Bennion
9. Continuation of FY2021 Budget Workshop (if necessary) – Quinn Bennion

ADMINISTRATIVE REPORTS

STAFF REPORTS

ADJOURN

NOTE: In compliance with the Americans with Disabilities Act, individuals needing special accommodations during this meeting should notify Quinn Bennion, 374 East Main, Vernal, Utah 84078 or phone (435)789-2255 at least three days before the meeting.

NOTICE OF PUBLIC MEETING

TO THE PUBLIC AND RESIDENTS OF VERNAL CITY: Notice is hereby given that the Vernal City Council will hold a Special Budget Meeting on Wednesday, May 20, 2020 at 5:30 p.m. in the Vernal City Community Room at 374 East Main Street, Vernal, Utah.

A G E N D A

1. ACKNOWLEDGMENT AND APPROVAL OF SPECIAL MEETING

2. FY2020 BUDGET WORKSHOP
   - A. WATER
   - B. SEWER
   - C. MAYOR AND COUNCIL
   - D. CITY ATTORNEY
   - E. CITY ADMINISTRATION

3. BUDGET REDUCTION IDEAS / DISCUSSION INCLUDING SEPARATION AGREEMENT

ADJOURN

NOTE: In compliance with the Americans with Disabilities Act, individuals needing special accommodations during this meeting should notify Quinn Bennion at 374 East Main Street, Vernal, Utah 84078, telephone: 789-2255.

NOTICE OF PUBLIC MEETING

TO THE PUBLIC AND RESIDENTS OF VERNAL CITY: Notice is hereby given that the **VERNAL CITY COUNCIL** will hold an electronic meeting on **Wednesday, May 20, 2020 at 7:00 p.m.** in the Vernal City Council Chambers at 374 East Main St, Vernal, Utah.

A G E N D A

7:00 p.m. **OPENING CEREMONY**

1. Invocation or Uplifting Thought
2. Pledge of Allegiance

STANDING BUSINESS

1. Approval of the Minutes of May 6, 2020 Special Budget Meeting
2. Approval of the Minutes of May 6, 2020 Regular Meeting

PUBLIC BUSINESS

1. Request for Sponsorship of the Jr. Livestock Show – Nikki Long
2. Presentation Regarding the Possible Addition of Bike Lanes along SR-121 as Part of the UDOT Resurfacing Project – CIVCO Engineering

7:15 pm **PUBLIC HEARING**

1. FY2021 Budget - Mike Davis

POLICY AND LEGISLATION

1. Request for Approval of a Minor Subdivision for Tyler and Marilee Shiner for the Property Located at 261 West 500 South, Vernal, Utah – Allen Parker
2. Ratification of CARES Act Grant Agreement for $1,043,853 for Purposes of Operation and Maintenance of the Airport – Quinn Bennion
3. Consider Approval of Amendment No. 1 to Grant Agreement (AIP Grant No. 3-49-0037-037-2020) for the Reimbursement of the Airport Fence – Quinn Bennion
4. Consider Approval of an Interlocal Agreement with Naples City and Uintah County for Participation in a Joint Storm Water Drainage System Project – Resolution No. 2020-05 – Quinn Bennion
5. Consider Approval of a Statewide Utility License Agreement with UDOT for Use of the State's Right-of-Way for Utilities – Quinn Bennion
6. Ratification of City Employee's Health Insurance – Quinn Bennion
7. Discussion Regarding Exempt Employees (First Reading) – Resolution No. 2020-04 – Quinn Bennion
8. Update of COVID-19 Crisis – Quinn Bennion
9. Continuation of FY2021 Budget Workshop (if necessary) – Quinn Bennion

ADMINISTRATIVE REPORTS

STAFF REPORTS

ADJOURN

NOTE: In compliance with the Americans with Disabilities Act, individuals needing special accommodations during this meeting should notify Quinn Bennion, 374 East Main, Vernal, Utah 84078 or phone (435)789-2255 at least three days before the meeting.

MEMORANDUM

TO: **Mayor & City Council**

FROM: **Quinn Bennion, City Manager**

RE: ***Agenda Items for May 20, 2020 Council Meeting***

PUBLIC BUSINESS

1. **Request for Sponsorship of the Jr. Livestock Show – Nikki Long.** The City has supported the Jr. Livestock Show for many years. The 2020 budget includes $750 for this event. The applicant requested $1,125 which is the previous budgeted amount in 2019.

2. **Presentation regarding the possible addition of bike lanes along SR-121 as part of the UDOT resurfacing project** – CIVCO. UDOT is preparing plans for a resurface project on SR-121 and is seeking input from the City and County regarding bike lanes along the route. The extent of the resurfacing project is from Hwy 40 (Main St) to the Burdick pit. The Uintah County Trails Master Plan shows SR-121 from Vernal to Lapoint as a top ten project to provide bike lanes along the roadway. UDOT requested that the trail committee, the County and the City be contacted to gain their acceptance of UDOT restriping the roadway to include a ”Buffered Bike Lane”. The buffered bike lane is possible from 3500 West to 500 West except where there are center turn lanes. Providing the bike lanes is only possible if parking is not allowed along the roadway and No Parking signs will be installed by UDOT. The County and the City will need to enforce the no parking and maintain the bike lanes by sweeping regularly. This concept was brought up at the Dino Trails committee meeting on 5-7-20. It was mentioned in the meeting that 500 West was not included in the trails master plan as a bike lane but 500 North is included. The trails committee was favorable of the bike lanes striped but there is concern about eliminating the parking. Feedback is desired from the City Council.

PUBLIC HEARING

1. FY2021 Budget – Mike Davis

POLICY AND LEGISLATION

1. **Request for approval of a minor subdivision for Tyler and Marilee Shiner for the property located at 261 W. 500 S.** – Allen Parker. This request is for a flag lot from a large lot on 500 S. The Planning Commission approved the minor subdivision at their last meeting.

2. **Ratification of CARES Act Grant agreement for $1,043,853 for purposes of operation and maintenance of the airport –** Quinn Bennion. This item was approved by City Council during a phone poll. This action is to ratify the decision and accept the FAA – CARES Act

grant for the airport. The $1M in funds are welcome during the tough budget and economic times. The funds will be used to pay for the new sweeper (about $550k). The remainder will be used for operations of the airport during 2020.

3. **Consider approval of amendment No. 1 to grant agreement (AIP Grant No. 3-49-0037-037-2020) for the reimbursement of the airport fence** – Quinn Bennion. As part of the CARES Act funding, the FAA will cover 100% of the airport fence reimbursement. This removes the local 5% share of the project or $32,641. Uintah County and UTSSD paid for the fence project originally and will be reimbursed the cost of the project as FAA funds are available.

2. **Consider approval of an Interlocal Agreement with Naples City and Uintah County for participation in a joint storm water drainage system project** – Quinn Bennion. This ILA relates to the storm drain project with Naples City, Uintah County and UDOT. The Central Canal company is planning on piping the full length of Central Canal for the full approximately 9 miles of the open channel canal. The project is scheduled for construction in 2021. The channel currently captures storm water from the three entities and it mixes with the irrigation water as it is conveyed and used downstream. When the canal is piped, there needs to be a storm water system to convey the drain and flood water. The most economical option is for the County and the two cities to convert the existing channel to a storm water system. The project will be managed by Naples City and a CIB application will be submitted by June 1 seeking grant and loan assistance. This project has been discussed previously as part of a public hearing. Vernal City's anticipated cost is $24,750 if the CIB funds for grant and loan are obtained. The amount will increase if the requested CIB grants are not fully funded. The City's portion of the funding will come from the storm drain account.

4. **Consider approval of a Statewide Utility License agreement with UDOT for use of the State's right-of-way for utilities** – Quinn Bennion. The City uses the State right-of-way for utility lines. The State requires a 5 year renewal of the agreement for the continued use of the right-of-way. The City's street, water and sewer crews are knowledgeable about the regulations and traffic control when working in the State's ROW.

5. **Ratification of the City's employee health insurance** – Quinn Bennion. This item was approved by City Council during a phone poll. This action is to ratify the decision and accept the 0% increase option for the city's health insurance plans with United Health Care. After many negotiations, the City reviewed two options: 0% with plan changes and 2% with no plan changes. This was a significant effort to keep the health insurance increase to a minimum. In the council packet, two attachments show the plan changes and the employer / employee payment matrix.

6. **Discussion regarding exempt employees (first reading) – Resolution No. 2020-04** – Quinn Bennion. The resolutions is a first reading. The resolution will add four positions as exempt employees. The Public Works Director and City Recorder positions are not currently filled or budgeted positions, but that may change with future management structures. Currently the City Recorder role is with the City Manager.

7. **Update of COVID-19 crisis** – Quinn Bennion

8. **Continuation of FY2021 budget workshop (if necessary)** – Quinn Bennion

MINUTES OF THE VERNAL CITY COUNCIL SPECIAL BUDGET MEETING HELD MAY 6, 2020 at 5:30 p.m. in the Vernal City Community room, 374 East Main, Vernal, Utah 84078.

PRESENT: Councilmembers Nicholas Porter, Dave Everett, Ted Munford, Travis Allan and Bert Clark and Mayor Doug Hammond.

WELCOME: Mayor Doug Hammond welcomed everyone to the meeting.

ACKNOWLEDGMENT AND APPROVAL OF SPECIAL MEETING: *Councilmember Dave Everett moved to acknowledge and approve this special meeting. Councilmember Travis Allan seconded the motion. The motion passed with Councilmembers Everett, Allan, Porter, Munford and Clark voting in favor for a unanimous vote.*

FY2020 BUDGET WORK SHOP

Justice Court:

Councilmember Ted Munford stated that the budget is in serious trouble to the point staff will have to be cut. He asked the Judge to review his budget to see if there were any areas that could be cut even more. Judge Ray Richards stated that his operating budget is $13,200 outside of personnel. Certain items, such as trainings are required. However, with the COVID–19 outbreak some training has been canceled. Councilmember Ted Munford asked about his personnel staffing. Judge Richards stated they currently have 3 full-time clerks and it would be hard to go down to two, especially on days with court. If the courts are combined, they can be maintained with three clerks. The Council thanked the Judge for his cooperation.

Finance:

Councilmember Bert Clark noted that the travel is up. Mike Davis stated he slowed down on travel the last few years as he does not like to send new employees and now several employees need to attend training. Councilmember Ted Munford asked if it is mandated. Mike Davis answered no, however, the April conference was canceled. After further discussion, the consensus was to drop the travel from $5700 to $3500, and drop the office expenses $500. The training line item can also be dropped to $1500. Councilmember Bert Clark asked how many employees are in this department. Mike Davis stated he has five in Finance and one that handles the Special Service Districts. There was some discussion on possibly losing a position.

Motor Pool

Councilmember Ted Munford explained the budget situation and asked if there were any other expenses that could be cut. Rick Green, motor pool supervisor, stated there is not a lot to cut. He noted that he has been requesting a truck and knows the chances of purchasing are slim. He stated that the tool budget could be cut in half to $500. Councilmember Dave Everett asked how many employees are in this department. Rick Green stated there are two of them and it would be difficult to do some things alone and it would not be safe. Councilmember Bert Clark suggested the City implement a no-idol policy to cut down on fuel consumption. There was some

AWAITING FORMAL APPROVAL

discussion on overtime which mostly occurs with snow plowing or watering. Rick suggested the overtime budget be dropped to $1000.

Streets

Glade Allred, street supervisor, stated that he can cut the book line item down to $100 and the supplies down to $1000. The crack sealing cannot cut a lot and the fuel is an estimate. The cost for the landfill can be cut down to $1000 and the City will put the street sweepings into a pile at the yard. Quinn Bennion stated that line item has been reduced from $5000 down to $2000 already, and at some point it will have to be hauled off. The road paint striping has been cut to once a year and some streets with low traffic will not be painted. Glade Allred stated he needs the sidewalk trip hazard funds to keep the liability down. Councilmember Ted Munford stated it should be dropped to $35,000 and discussed again later if necessary. Glade Allred stated he would drop the software upgrades. Quinn Bennion stated that the City does have a cost of $400,000 for chip and seal that is a joint project with the Special Service District with funding through the Community Impact Board. Councilmember Ted Munford asked if the chip and seal can be skipped for 2021. There was some discussion regarding the City not being a part of the Transportation District. The consensus was to skip chip and seal and possibly only do a fog this year. Glade Allred suggested the street enhancements budget be zeroed out. Quinn suggested it be $1000. He stated the City is getting a lot of calls on the green dinosaur decorations. Glade Allred pointed out that with his department being down two positions there is not enough time to decorate the dinosaur. Mike Davis stated the uniform account can be dropped back to $5000.

Parkways:

Quinn Bennion stated that the City will see a savings on the street lights not this year, but next year with the removal of the lights on West Main. Councilmember Ted Munford asked that he skip any non-essential training. Glade Allred stated he needed to be cautious with training so the employees do not get hurt or cause an issue. Quinn stated that the insurance carrier, ULGT, provide regular training and the staff does participate. Glade Allred stated that they have reduced the number of flowers by over 500 pots so two people can handle the job. He noted that he doesn't know what will happen with Holly Days event this year.

ADJOURN: There being no further business; *Councilmember Bert Clark moved to adjourn. Councilmember Dave Everett seconded the motion. The motion passed with a unanimous vote and the meeting was declared adjourned.*

_____

Mayor Doug Hammond

ATTEST:

_____

Roxanne Behunin, Deputy Recorder (S E A L)

AWAITING FORMAL APPROVAL

MINUTES OF THE VERNAL CITY COUNCIL REGULAR MEETING HELD MAY 6, 2020 at 7:00 p.m. in the Vernal City Council room, 374 East Main, Vernal, Utah 84078.

This meeting was conducted as an electronic meeting with the anchor location being held at the Vernal City Council Chambers, 374 East Main St, Vernal, Utah. Because of gathering restrictions put in place by the Utah Department of Health, the anchor location only had nineteen participants in attendance. The meeting was streamed live vi Facebook.

PRESENT: Councilmembers Nicholas Porter, Dave Everett, Ted Munford, Travis Allan and Bert Clark and Mayor Doug Hammond.

WELCOME: Mayor Doug Hammond welcomed everyone to the meeting.

INVOCATION OR UPLIFTING THOUGHT: The invocation was given by Councilmember Dave Everett.

PLEDGE OF ALLEGIANCE: The Pledge of Allegiance was led by Councilmember Nicholas Porter.

APPROVAL OF CITY COUNCIL SPECIAL BUDGET MEETING MINUTES OF APRIL 29, 2020: *Councilmember Bert Clark moved to approve the minutes of April 29, 2020. Councilmember Nicholas Porter seconded the motion. The motion passed with Councilmembers Everett, Munford, Allan, Porter and Clark voting in favor.*

INTRODUCTION OF THE NEW METER TECHNICIAN - CHAD MAJORS: Mike Davis explained that with Dwayne Winkler retiring, the City recruited for a new meter technician and received 101 applications. The decision was made to hire Chad Majors who had been working with his dad, Majors Heating. He lives in Jensen on a farm and the staff is excited to have him working here. Councilmember Bert Clark asked if his father is Kurt Majors. Chad answered yes. The Council and staff welcomed Chad to employment with Vernal City.

REQUEST FOR SPONSORSHIP OF VERNAL ROD AND GUN CLUB EVENT: Stacey Hawley stated that although she submitted a funding application to the City, they have decided not to ask for money this year. She thanked the City for the many years of support for the gun club. The annual tournament will be held with the support of all the shooters and she asked the City to help advertise the event through digital signs on Highway 40 that say "welcome shooters". Councilmember Dave Everett suggested she approach businesses such as Wendy's to post signs. Councilmember Nicholas Porter stated his employer can post a sign. Quinn Bennion stated he would work with Travel and Tourism to put something on the electronic sign. Steve Evans, with Evans Media, offered his services to help the community. Stacey Hawley stated that is why they love Vernal. She asked the Council to let every parent know how important the kids are to this event. Councilmember Bert Clark stated he would help with the corn hole tournament.

AWAITING FORMAL APPROVAL

MINUTES OF THE VERNAL CITY COUNCIL REGULAR MEETING HELD MAY 6, 2020

REQUEST FOR SPONSORSHIP OF ALIVE AFTER 5 EVENTS - STEVE EVANS, EVANS FAMILY MEDIA: Steve Evans and Marie Smith presented an application for sponsorship to the City. Mr. Evans explained that he has been partnering with the City for the last 17 years to bring this event to downtown Vernal. He noted that there are two objectives. The first is to enhance community pride, and the second is to revitalize downtown commerce. Due to the circumstances of the last 6 weeks, morale in the community is at all-time low shutting down many businesses. One thing that would help calm the fears of everyone in the community is to hold events like Alive after Five and the rodeo to bring back a sense of normalcy. Another issue is the sponsorships will be lighter this year. Marie Smith gave a short presentation on the event and explained that it does get people involved to take part in local talent. The tentative dates for Alive after 5 are each Thursday night beginning July 16th to August 6th. Councilmember Dave Everett agreed that the City needs to approach this as a way to bring back a sense of normalcy, and people are hungry to be a part of this beautiful City and community again. He thanked Mr. Evans for all the years of dedication for this event. Quinn Bennion stated that this request is for $3500. Steve Evans amended his request to $3000. Quinn Bennion stated $3000 has been budgeted in the 2020 budget. Councilmember Ted Munford indicated he had a conflict with this item. *Councilmember Dave Everett moved to sponsor Alive after Five events in the amount of $3000. Councilmember Nicholas Porter seconded the motion. The motion passed with the following roll call vote:*

Councilmember Allan .....aye;
Councilmember Munford .....abstained;
Councilmember Everett .....aye;
Councilmember Porter .....aye;
Councilmember Clark .....aye.

PUBLIC HEARING: FY2020 BUDGET REOPENER NO. 1 - ORDINANCE NO. 2020-03: Mike Davis explained that the sales tax numbers are two months back so the City has not received current numbers yet. COVID-19 hit the City hard in April, so some items were cut to help with the budget. In the police department, $60,000 was cut out of some programs, and the paint striping was reduced to one per year. The projection is the City will need to use $600,000 of unappropriated funds to balance the FY2020 budget. He noted that the largest decrease is the oil and gas revenue. Mayor Doug Hammond opened the public hearing. There being no public comments, the public hearing was closed. *Councilmember Ted Munford moved to accept Ordinance No. 2020-03 as presented. Councilmember Bert Clark seconded the motion. The motion passed with the following roll call vote:*

Councilmember Allan .....aye;
Councilmember Munford .....aye;
Councilmember Everett .....aye;
Councilmember Porter .....aye;
Councilmember Clark .....aye.

REQUEST TO PROCLAIM MAY 2020 AS BUILDING SAFETY MONTH: Allen Parker explained that May is National Building Safety month. To highlight the activities of building

AWAITING FORMAL APPROVAL

officials to make sure a safe supply of housing and buildings are in the City and nation. *Councilmember Bert Clark moved to authorize the Mayor to sign the proclamation. Councilmember Dave Everett seconded the motion. The motion passed with the following roll call vote:*

Councilmember Allan .....aye;
Councilmember Munford .....aye;
Councilmember Everett .....aye;
Councilmember Porter .....aye;
Councilmember Clark .....aye.

CONSIDER APPROVAL OF A 60 DAY EXTENSION OF THE EMERGENCY DECLARATION ORDER FOR COVID-19 CRISIS: Quinn Bennion stated that the emergency declaration is set to expire and since the emergency is not over, this declaration needs to be renewed. The Mayor can do 30 days, however, the Council needs to authorize a longer time frame. *Councilmember Dave Everett moved to extend the emergency declaration by 60 days. Councilmember Nicholas Porter seconded the motion. The motion passed with the following roll call vote:*

Councilmember Allan .....aye;
Councilmember Munford .....aye;
Councilmember Everett .....aye;
Councilmember Porter .....aye;
Councilmember Clark .....aye.

PRESENTATION OF THE FY2021 TENTATIVE BUDGET: Mike Davis explained that part of the budget process requires the staff to present a tentative budget to the governing body. He noted that this is a working document and the numbers will not be changed until after the budget workshops. *Councilmember Ted Munford moved to accept the FY2021 tentative budget. Councilmember Travis Allan seconded the motion. The motion passed with the following roll call vote:*

Councilmember Allan .....aye;
Councilmember Munford .....aye;
Councilmember Everett .....aye;
Councilmember Porter .....aye;
Councilmember Clark .....aye.

REQUEST FOR APPROVAL OF THE CITY'S WATER CONSERVATION PLAN: Quinn Bennion reminded the Council that every five years the City is required to update and approve the water conservation plan. This plan was drafted with the help of the engineers with the primary goals to detect leaks and implement the meter replacement program to reduce water loss. Councilmember Ted Munford asked if there is a leak detection problem. Quinn Bennion answered that they have been working on it, but the water is still showing up in the sewage system. *After further discussion, Councilmember Bert Clark moved to accept the Water*

AWAITING FORMAL APPROVAL

Conservation Plan. Councilmember Travis Allan seconded the motion. The motion passed with the following roll call vote:

Councilmember Allan .....aye;
Councilmember Munford .....aye;
Councilmember Everett .....aye;
Councilmember Porter .....aye;
Councilmember Clark .....aye.

REQUEST FOR APPROVAL OF AGREEMENT WITH UDOT FOR WAYFINDING SIGNS IN UDOT RIGHT-OF-WAY: Quinn Bennion explained that he has been working on this project for a few years and the signs are now being built. He displayed one of the signs. He noted that the majority of them are in the UDOT right of way and are required to have 6" lettering. The signs are reflective with the three ships and dinosaur on the bottom. This project involves eight entities and utilizes two grants. Each entity with signs in their jurisdiction must have an agreement with UDOT to take responsibility to maintain the signs and Vernal City is responsible for 22 of them. Also, the City has to commit the crews to put them up. The City's cost commitment will be when the signs are damaged, vandalized or fade out and have to be replaced. *Councilmember Nick Porter moved to approve the agreement with UDOT for the wayfinding signs. Councilmember Ted Munford seconded the motion. The motion passed with the following roll call vote:*

Councilmember Allan .....aye;
Councilmember Munford .....aye;
Councilmember Everett .....aye;
Councilmember Porter .....aye;
Councilmember Clark .....aye.

UPDATE OF COVID-19 CRISIS: Quinn Bennion explained that one item for this crisis he is watching closely is the Cares Act that was recently passed by the Federal Government. This Act has a distribution to local governments to cover their costs associated with the pandemic. He acknowledged that he has spent a lot of time going through the numbers to attend meetings to make sure each area of the State receives their fair share. However, these funds cannot be used to replace revenue. They can be used for small business grants, utility grants, rental and mortgage payment grants to help the community. Also, UBAG received an additional $430,000 for the CDBG program for the Tri-County area. Councilmember Bert Clark asked if certain denominations would qualify. Quinn Bennion stated they do qualify for disaster relief and payroll protection as a non-profit. Quinn explained that another item relates to the graduating seniors and a lot of parents want to provide some sort of celebration within the health guidelines. Two suggestions have been made to celebrate their graduation. One is to place banners over the top of the City banners to display the graduating class pictures along Main Street, and the other is to line up along Main Street and have a procession of the students. That celebration is scheduled for May 22nd. Mayor Doug Hammond stated that the health department has requested the State consider allowing our area to go to yellow stage.

AWAITING FORMAL APPROVAL

ADJOURN: There being no further business; *Councilmember Travis Allan moved to adjourn. Councilmember Ted Munford seconded the motion. The motion passed with a unanimous vote and the meeting was declared adjourned.*

_____

Mayor Doug Hammond

ATTEST:

_____

Roxanne Behunin, Deputy Recorder (S E A L)

AWAITING FORMAL APPROVAL

Vernal City
Event Funding
Application Form

Application Date: May 14, 2020 Date(s) of Event: June 1-4, 2020

Amount Requested: $1,125.00

Applicant/Organization: Uintah Basin Jr. Livestock Show (UBJLS)

Type of Organization:

- [x] Not-for-profit (501 c 3)
- [ ] For profit
- [ ] Government agency / district
- [ ] Other: _____

Contact Person / Title: Nikki Long / 2020 committee secretary

Mailing Address: 152 E. 100 N. Vernal, UT 84078

Email: nikki.long@usu.edu Phone: 435-781-5452

Description of Event: Four day junior livestock show & auction. This year's show is only open to Tri-County participants due to COVID-19 restrictions. Also includes a peewee goat show for younger youth, and a VIP Goat show for youth with special needs.

Besides funding, what other city services / personnel are requested to help with the event?

N/A

How will city funds be used? Funds will be used for class premium money and awards given to exhibitors.

Total budget for the event: $36,000

Total event funds remaining after last year's event $4,500

Other sources of funding for this event: Donations from businesses and individuals - both local & some out of town.

Have you approached other public entities for funds for this event? Which entity and how much was granted?

Yes - Dept. of Agriculture - won't get funding from State this year since we had to close the show to Tri-County.

Estimated number of event attendees: 200

Number of hotel room nights anticipated to be used by attendees / visitors: 3 / won't have a lot of people stay in hotels this year.

Do you plan to run this event next year? X yes _____ no;

Other Comments: This is a unique year with the virus but we want to provide our youth with the opportunity to show their animals, as well as sell them. We appreciate the support we have recieved in the past to help make our show great.

Priority will be given to community events that attract visitors to Vernal. The City does not generally support charity fundraisers. City funds cannot be used to benefit individual people. I agree the information provided is true and accurate. I agree to make a presentation to the Vernal City Council summarizing the event and explaining how the city's fund will be used.

Nikelei Long

Event Director / Contact Person

5/14/2020

Date

The Event Funding Application Form should be submitted at least 10 days prior to the City Council meeting at which the request is reviewed.

Your event may require permits or applications such as a special event permit (sales tax), temporary food vendor or street closure. Visit with City Staff if you need help with these processes.

(Accounting code- Internal use only)

Amount in City budget for this event: __$_____ Last year's funded amount: __$_____

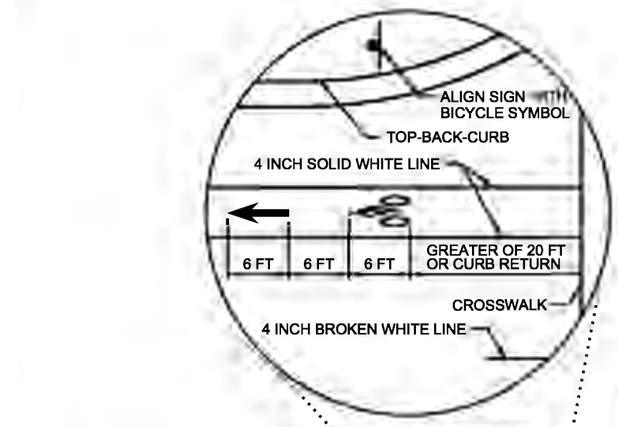

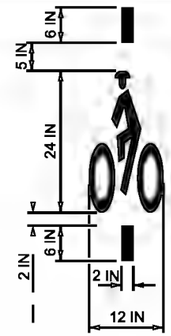

ACTUATED BICYCLE DETECTOR PAVEMENT MARKING

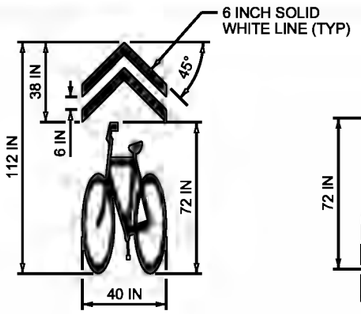

SHARED LANE MARKING

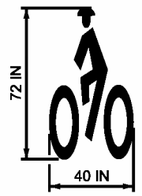

BICYCLE SYMBOL MARKING

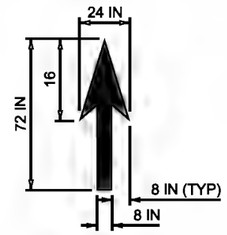

BICYCLE DIRECTIONAL ARROW MARKING

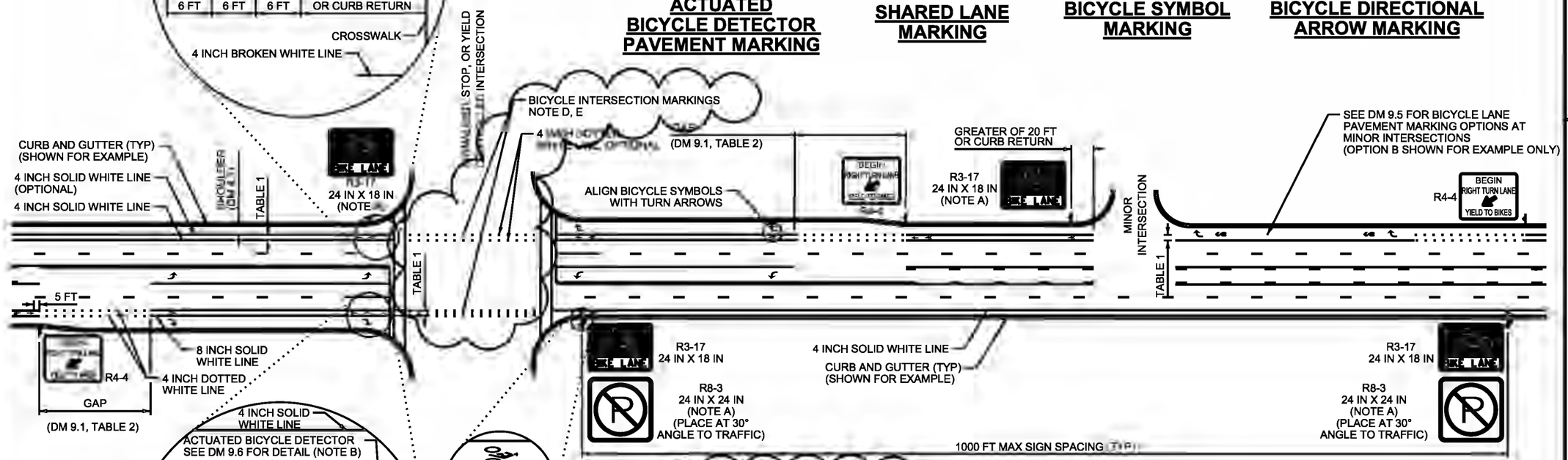

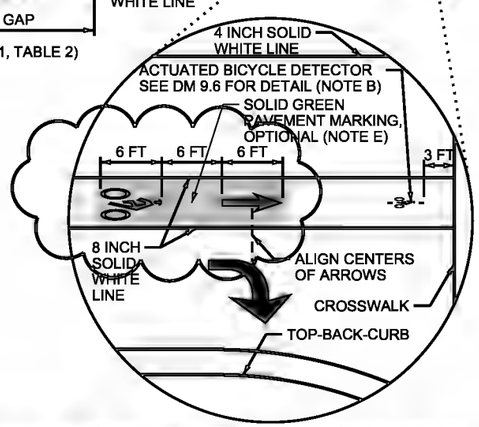

PAVEMENT MARKINGS WITH ACTUATED BICYCLE DETECTOR

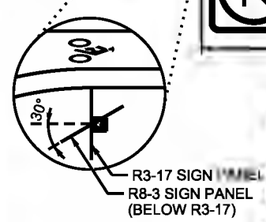

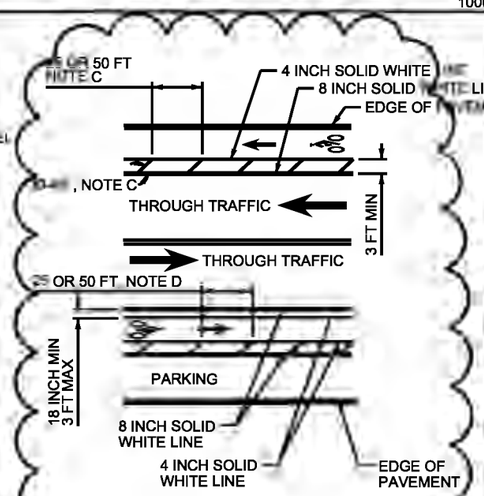

BUFFERED BICYCLE LANE PAVEMENT MARKINGS

NOTES:

A. USE NO PARKING SIGN, R8-3 WHEN SHOULDER WIDTH ADJACENT TO BICYCLE LANE IS LESS THAN 8 FT.

B. INSTALL BICYCLE DETECTOR PAVEMENT MARKINGS ONLY ON ACTUATED APPROACHES WHERE DETECTION IS THE ONLY MECHANISM USED TO CALL THE SIGNAL PHASE WHERE IT IS [illegible] ARE [illegible] CALL [illegible]

C. 4 INCH SOLID WHITE BUFFER HATCH, ANGLED AT 30-45 DEGREES, SPACED AT 25 FT FOR SPEED LIMITS <45 MPH, 50 FT FOR SPEED LIMITS ≥45 MPH. ALTERNATIVE HATCHING MARKINGS INCLUDE CHEVRON STRIPING, PER MUTCD 3B.24. BUFFER HATCHING IS REQUIRED ON BUFFERS 3 FT IN WIDTH OR WIDER.

D. USE BICYCLE INTERSECTION MARKINGS ONLY IN LOCATIONS WITH OFFSETS OF 2'-0" OR GREATER.

E. GREEN PAVEMENT MARKINGS MAY BE USED ON HIGH PRIORITY BIKEWAYS OR WITH SPECIAL TREATMENTS SUCH AS TWO-STAGE TURN QUEUE BOXES (DM 9.5). GREEN PAVEMENT MARKINGS SHOULD BE USED TO FILL BETWEEN DOTTED LINES TO HIGHLIGHT CONFLICT AREAS SUCH AS INTERSECTIONS OR MERGE ZONES. USE PREFORMED THERMOPLASTIC PAVEMENT MARKINGS FOR GREEN AREAS. GREEN PAINT MAY BE USED IN AREAS WHERE VEHICLES WILL NOT TRACK OVER THE PAVEMENT MARKINGS.

TABLE 1 - BICYCLE LANE WIDTH*

DESIGN SPEED OR VOLUME	< 35 MPH < 7,[illegible] ADT	≥ 35 MPH ≥ 7,[illegible] ADT
ON STREET PARKING	5-7 FT	BUFFERED OR SEPARATED, 5-7 FT W/ 3 FT MINIMUM BUFFER
NO ON STREET PARKING	5-6.5 FT	
VERTICAL SURFACE**	5-7 FT	
NO VERTICAL SURFACE**	5-6.5 FT	

*BICYCLE LANE WIDTH IS NOT INCLUSIVE OF GUTTER PAN

**VERTICAL SURFACE IS ANY CONTINUOUS OR REPEATED VERTICAL OR NEAR-VERTICAL ELEMENT GREATER THAN 18 INCHES IN HEIGHT, INCLUDING BUT NOT LIMITED TO: BARRIER, GUARDRAIL, WALLS AND PARKED VEHICLES.

REVISIONS

NO.	DATE	APPR.	REMARKS

UTAH DEPARTMENT OF TRANSPORTATION
UDOT ROADWAY DRAWINGS

DRAWN BY
CHECKED BY
APPROVED
DATE
PROFESSIONAL ENGINEER

BICYCLE LANE PAVEMENT MARKINGS (SHEET 1 OF 2)

ROADWAY DESIGN MANUAL DRAWING TITLE

RDM. DWG. NO.
DM 9.4

LOCATION	ROAD WIDTH APPROX. FT	LEFT BIKE PATH WITH BUFFER 8 FT NEEDED	LEFT SHOULDER	LEFT RIGHT TURN 12' LANE	LEFT 12' LANE	12' CENTER LANE	RIGHT 12' LANE	RIGHT SHOULDER	RIGHT BIKE PATH WITH BUFFER 8 FT NEEDED
BEGIN PROJECT TO SKYLINE DRIVE	28	NO	2		12		12	2	NO
SKYLINE DRIVE TO 4215 WEST	28	NO	2		12		12	2	NO
4215 WEST TO DELMAR WAY	28	NO	2		12		12	2	NO
DELMAR WAY TO 3500 WEST	28	NO	2		12		12	2	NO
3500 WEST TO 3000 WEST	40	YES	8		12		12	8	YES
3000 WEST TO 2500 WEST	40	YES	8		12		12	8	YES
2500 WEST TO 2400 WEST	43	NO	3.5		12	12	12	3.5	NO
2400 WEST TO 2000 WEST	43	YES	9.5		12		12	9.5	YES
2000 WEST TO 1800 WEST	56	YES	12		12	12	12	8	YES
1800 WEST TO 1700 WEST	56	YES	12		12	12	12	8	YES
1700 WEST TO CANAL	42	YES	12		12		12	6	NO
CANAL TO 1500 WEST	39	NO	3		12	12	12	0	NO
1500 WEST TO 1150 WEST	41	YES	8		12		12	9	YES
1150 WEST TO 1075 WEST	44	YES	8		12		12	12	YES
1075 WEST TO 900 WEST	49.5	YES	8		12		12	17.5	YES
900 WEST TO 800 WEST	48	YES	8		12		12	16	YES
800 WEST TO 500 NORTH	40	YES	8		12		12	8	YES
500 NORTH TO 400 NORTH	54	NO	0	12	12	12	12	6	NO
400 NORTH TO 200 NORTH	51	YES	13		12	12	12	2	NO
200 NORTH TO 100 NORTH	57	YES	12		12	12	12	9	YES
100 NORTH TO END PROJECT	57	YES	12		12	12	12	9	YES

VERNAL CITY CORPORATION
PROPOSED BUDGET
MAY 31, 2020
GENERAL FUND

		FY-2018	FY-2019	YTD ACTUAL	BUD-2020	BUD-2021
	TAXES					
10-310-1100	GEN'L PROPERTY TAXES-CURRENT	360,272.65	435,261.25	388,490	398,708	390,000
10-310-1200	DELINQUENT PRIOR YEARS' TAXES	30,834.02	17,975.79	12,973	17,032	17,000
10-310-1300	GENERAL SALES AND USE TAXES	3,633,365.83	3,517,270.25	2,041,178	3,600,000	2,700,000
10-310-1301	CITY OPTION TAX	888,152.53	841,287.43	456,657	870,000	780,000
10-310-1303	CNTY/HWY PUBLIC TRT TAX- L(A2)	.00	.00	25,896	0	300,000
10-310-1310	INNKEEPERS ROOM TAX	75,294.41	100,420.53	59,640	76,000	60,000
10-310-1320	HIGHWAY OPTION TAX	1,334,461.88	1,259,013.90	685,984	1,315,000	1,183,500
10-310-1410	FRANCHISE TAX - ROCKY MNT PWR	547,017.10	546,691.01	415,260	560,000	560,000
10-310-1420	FRANCHISE TAX: QUESTAR	231,827.82	202,772.24	177,374	220,000	220,000
10-310-1432	MUNICIPAL TELECOMM TAX	214,177.13	188,287.20	110,040	210,000	210,000
10-310-1440	FRANCHISE TAX - TV STRATA	47,517.36	46,706.27	32,288	48,000	48,000
10-310-1700	FEE-IN-LIEU OF PROPERTY TAXES	32,000.53	35,694.25	21,923	30,000	30,000
10-310-1900	PENALTY/INTEREST:DELINQENT TAX	3,475.00	1,341.59	1,186	1,000	1,000
	TOTAL TAXES	7,398,396.26	7,192,721.71	4,428,891	7,345,740	6,499,500
	LICENSES & PERMITS					
10-320-2100	BUSINESS LICENSES	72,883.21	68,853.24	63,873	68,000	63,000
10-320-2200	BUILDING PERMITS	39,207.53	46,021.66	48,347	50,000	50,000
10-320-2240	ENCROACHMENT PERMIT	2,058.50	1,080.00	2,060	3,000	3,000
10-320-2250	PLAN REVIEW	14,353.94	17,967.58	19,984	28,000	10,000
10-320-2300	ESCROWS FOREFEITED	.00	807.28	0	0	0
	TOTAL LICENSES & PERMITS	128,503.18	134,729.76	134,264	149,000	126,000

VERNAL CITY CORPORATION
PROPOSED BUDGET
MAY 31, 2020
GENERAL FUND

		FY-2018	FY-2019	YTD ACTUAL	BUD-2020	BUD-2021
	INTERGOVERNMENTAL					
10-330-3440	GRANT - COVID 19	.00	.00	0	25,000	0
10-330-3450	C I B GRANT - MASTER PLAN	.00	.00	0	15,000	0
10-330-3510	POLICE - G.E.A.R.S.	8,334.52	18,751.30	8,134	10,000	0
10-330-3517	S.A.F.G. - POLICE FORFEITURE	2,137.80	7,000.00	0	5,000	5,000
10-330-3518	JAG GRANT - 16A187	4,547.55	.00	0	0	0
10-330-3519	J.C.A.T. OFFICER REIMBURSEMENT	3,868.30	1,428.90	913	5,000	0
10-330-3520	I.C.A.C. JUSTICE ASST GRANT	9,882.28	11,259.14	5,713	8,000	0
10-330-3522	POLICE GRANT	.00	27,683.72	0	0	0
10-330-3523	ST REIMB: ALCH & TOBACO & DUI	5,840.97	.00	1,780	2,000	0
10-330-3524	SCHOOL RESOURCE OFFICER	26,000.00	26,000.00	26,000	26,000	206,000
10-330-3527	EXTRADITION EXP REIMBURSEMENT	1,203.52	347.09	385	500	500
10-330-3529	WORKMAN'S COMP REIMBURSEMEN	.00	5,209.28	0	0	0
10-330-3534	FEDERAL GRANT: V.A.W.A	40,080.90	8,029.40	0	0	0
10-330-3535	FEDERAL GRANT: V.O.C.A	.00	26,376.79	41,868	50,000	68,000
10-330-3560	CLASS "C" ROAD FUND ALLOTMENT	454,076.36	473,185.37	299,676	475,000	440,000
10-330-3580	STATE LIQUOR FUND ALLOTMENT	32,997.33	46,218.96	39,549	39,600	35,000
10-330-3800	IMPACT MITIGATION SSD	8,470.68	8,470.68	6,353	8,500	8,500
10-330-3805	FIRE DISTRICT REMITTANCE	33,283.80	33,233.80	24,925	33,300	33,300
10-330-3810	ANIMAL SHELTER REMITTANCE	37,956.21	38,533.96	28,908	37,000	37,000
10-330-3815	TRANSPORTATION SSD	.00	.00	14,800	19,500	19,800
	TOTAL INTERGOVERNMENTAL	668,680.22	731,728.39	499,005	759,400	853,100
	CHARGES FOR SERVICES					
10-340-4110	ZONING AND SUBDIVISION FEES	3,405.00	4,216.60	3,900	3,000	3,000
10-340-4111	COURT COSTS & FEES	9,485.00	5,100.00	5,290	8,000	8,000
10-340-4115	CRIMINAL HISTORY REPORT	2,025.00	1,920.00	1,110	1,500	1,500
10-340-4117	FINGER PRINTING- 10 PRINT CARD	3,525.00	4,660.00	2,610	3,000	3,000
10-340-4119	SEX OFFENDER FEE	20.00	20.00	40	100	100
10-340-4150	SALE OF MAPS AND PUBLICATIONS	15.00	10.00	26	50	50
10-340-4210	INSURANCE REPORTS	75.00	945.20	886	100	100
10-340-4211	COMMUNITY ROOM - FEE'S	1,200.00	1,225.00	1,280	1,000	1,000
10-340-4215	EMPLOYEE SAVING PLAN - FEE'S	272.50	247.75	183	300	300
10-340-4311	GRAMA REQUEST	1,568.74	1,301.89	495	1,000	1,000
10-340-4500	LEASE INCOME - OLD CITY BLDG	46,125.00	33,584.50	24,000	33,600	25,000
10-340-4510	LEASE INCOME - DOWNTOWN	.00	.00	10,500	10,000	8,500
10-340-4550	UITILITY INCOME - OLD CITY BLD	4,464.05	3,932.62	3,721	4,000	4,000
10-340-4900	MISCELLANEOUS FEES	1,367.01	2,329.29	1,854	2,000	2,000
	TOTAL CHARGES FOR SERVICES	73,547.30	59,492.85	55,895	67,650	57,550
	FINES & FORFEITURES					
10-350-5200	FORFEITURES: DISTRICT COURT	71.31	75.36	0	100	100
10-350-5300	JUSTICE COURT FINES	293,662.52	337,225.01	259,040	310,000	310,000
10-350-5301	JUSTICE COURT STATE SURCHARGE	157,484.56	177,254.61	123,176	155,000	155,000
	TOTAL FINES & FORFEITURES	451,218.39	514,554.98	382,216	465,100	465,100

VERNAL CITY CORPORATION
PROPOSED BUDGET
MAY 31, 2020
GENERAL FUND

		FY-2018	FY-2019	YTD ACTUAL	BUD-2020	BUD-2021
	MISCELLANEOUS SERVICES					
10-360-6100	INTEREST EARNINGS	40,623.05	66,023.96	32,339	40,000	40,000
10-360-6200	VC REBATE / REFUNDS	16,222.00	.00	0	0	0
10-360-6306	ULGT - TAP	5,269.75	5,269.75	0	5,000	0
10-360-6310	INSURANCE REIMB. PROCEEDS	34,834.03	18,320.74	5,957	6,000	0
10-360-6410	SALE OF SURPLUS PROPERTY	1,855.50	470.36	12,112	12,200	0
10-360-6910	MISCELLANEOUS REVENUE	667.88	6,882.88	16,166	16,200	1,000
	TOTAL MISCELLANEOUS SERVICES	99,472.21	96,967.69	66,573	79,400	41,000
	CONTRIBUTIONS & TRANSFERS					
10-380-8111	WATER ADMIN. COST ALLOCATION	606,000.00	606,000.00	454,500	606,000	618,000
10-380-8112	SEWER ADMIN. COST ALLOCATION	360,000.00	360,000.00	270,000	360,000	360,000
10-380-8113	SOLID WASTE: ADMIN COST ALLOC	36,000.00	36,000.00	27,000	36,000	36,000
10-380-8115	MOTOR POOL REIMBURSEMENTS	4,048.17	4,610.36	3,863	3,000	3,000
10-380-8118	TRANSFER FROM S.I.D. ACCOUNT	78,632.73	.00	0	0	0
10-380-8119	TRANSFER FROM: GRANT/GREEN	.00	.00	0	5,000	0
10-380-8125	TRANSFER: EDUCATIONAL FUND	13,241.44	.00	0	0	0
10-380-8712	CONTRIBUTION: NOVA PROGRAM	200.00	.00	0	0	0
10-380-8714	CONTRIBUTION: HOLLY DAYS	52,556.21	66,600.00	59,074	60,000	30,000
10-380-8715	CONTRIBUTION: VICTIMS ADVOCATE	2,598.00	24,100.00	6,120	4,000	5,000
10-380-8790	USE OF BEGINNING FUND BALANCE	.00	.00	0	624,310	1,170,875
	TOTAL CONTRIBUTIONS & TRANSFER	1,153,276.55	1,097,310.36	820,557	1,698,310	2,222,875
	TOTAL FUND REVENUE	9,973,094.11	9,827,505.74	6,387,401	10,564,600	10,265,125

VERNAL CITY CORPORATION
PROPOSED BUDGET
MAY 31, 2020
GENERAL FUND

		FY-2018	FY-2019	YTD ACTUAL	BUD-2020	BUD-2021
	MAYOR & COUNCIL					
	WAGES & BENEFITS:					
10-401-1103	PERM EMPLOYEES/ REG HOURS	47,047.48	46,524.98	38,545	45,500	45,500
10-401-1313	F I C A	2,737.51	2,586.09	2,129	3,500	3,500
10-401-1314	RETIREMENT/CITY FOR EMPLOYEE	8,316.10	8,316.10	7,037	8,500	8,500
10-401-1316	MEDICAL INSURANCE	85,421.64	94,060.12	86,186	111,000	111,000
10-401-1317	WORKERS COMP.	1,631.97	1,983.39	1,198	2,000	2,000
	TOTAL WAGES & BENEFITS	145,154.70	153,470.68	135,094	170,500	170,500
	SERVICES & SUPPLIES:					
10-401-2100	BOOKS, SUBSCRIPT, MEMBERSHIPS	13,908.10	13,925.63	13,943	14,600	14,600
10-401-2200	PUBLIC NOTICES	2,913.51	3,867.26	871	3,000	3,000
10-401-2300	TRAVEL	6,235.65	8,919.99	2,352	5,000	5,000
10-401-2400	OFFICE EXP, SUPPLIES, POSTAGE	844.06	404.29	332	1,000	1,000
10-401-3160	ELECTIONS	4,903.90	52.25	0	0	0
10-401-3830	YOUTH CITY COUNCIL	2,671.96	3,031.88	2,621	3,000	3,000
10-401-3840	LOCAL EVENT SPONSORSHIPS	55,225.00	41,080.00	32,019	57,250	43,750
10-401-3841	VERNAL EXCITEMENT EVENTS	.00	5,720.00	0	0	5,000
10-401-3843	VISITOR CENTER	47,379.10	68,020.90	55,000	55,000	55,000
10-401-3845	HOLLY-DAYS ACTIVITIES	58,186.75	76,276.49	73,733	74,000	75,000
10-401-3850	EMPLOYEE APPRECIATION	.00	1,822.83	2,245	2,250	2,250
10-401-3851	CHAMBER OF COMMERCE	50,000.00	50,000.00	47,500	45,000	45,000
10-401-3910	SAFETY PROGRAM	1,500.00	4,141.76	3,318	6,000	6,000
10-401-4600	MISCELLANEOUS SERVICES	9,912.78	7,712.84	5,836	6,000	6,000
	TOTAL SERVICES & SUPPLIES	253,680.81	284,976.12	239,770	272,100	264,600
	CAPITAL EQUIPMENT:					
10-401-5003	IPADS	.00	4,518.16	0	0	0
	TOTAL CAPITAL EQUIPMENT	.00	4,518.16	0	0	0
	TOTAL MAYOR & COUNCIL	398,835.51	442,964.96	374,864	442,600	435,100

VERNAL CITY CORPORATION
PROPOSED BUDGET
MAY 31, 2020
GENERAL FUND

		FY-2018	FY-2019	YTD ACTUAL	BUD-2020	BUD-2021
	FINANCE					
	WAGES & BENEFITS:					
10-413-1103	PERM EMPLOYEES/REG HOURS	296,130.14	301,252.33	242,212	300,000	300,000
10-413-1104	PERM EMPLOYEES/ OT HOURS	62.29	97.27	0	1,000	500
10-413-1311	LONG TERM DISABILITY	1,666.20	1,436.09	1,224	2,000	2,000
10-413-1313	F I C A	21,323.20	21,744.55	17,817	23,000	23,000
10-413-1314	RETIREMENT/CITY FOR EMPLOYEE	52,951.29	52,695.81	44,282	55,000	55,000
10-413-1316	MEDICAL INSURANCE	78,249.68	81,901.09	68,210	85,000	85,000
10-413-1317	WORKERS COMP.	3,354.31	6,679.79	2,910	3,500	3,500
	TOTAL WAGES & BENEFITS	453,737.11	465,806.93	376,655	469,500	469,000
	SERVICES & SUPPLIES:					
10-413-2100	BOOKS, SUBSCRIPT, MEMBERSHIPS	164.00	199.00	44	300	300
10-413-2300	TRAVEL	3,056.64	3,289.31	2,451	3,000	5,700
10-413-2400	OFFICE EXP, SUPPLIES, POSTAGE	8,264.95	8,232.60	4,975	9,000	9,000
10-413-2800	TELEPHONE	1,923.69	1,132.79	1,318	1,500	1,500
10-413-3100	PROFESSIONAL SERVICES	30,204.00	30,909.00	35,899	35,700	37,500
10-413-3610	TRAINING	1,390.00	791.80	1,075	2,250	2,250
10-413-3700	MAINTENANCE AGREEMENTS	.00	143.00	130	200	200
10-413-4550	SOFTWARE & UPGRADE EXPENSE	29.95	.00	0	500	500
10-413-4610	BANK FEE'S AND CHARGES	338.71	100.41	0	1,000	1,000
	TOTAL SERVICES & SUPPLIES	45,371.94	44,797.91	45,891	53,450	57,950
	TOTAL FINANCE	499,109.05	510,604.84	422,547	522,950	526,950

		FY-2018	FY-2019	YTD ACTUAL	BUD-2020	BUD-2021
	CITY ATTORNEY					
	SERVICES & SUPPLIES:					
10-414-2100	BOOKS, SUBSCRIPT, MEMBERSHIPS	2,385.49	150.00	21	3,350	3,000
10-414-2300	TRAVEL	1,978.96	1,784.96	1,842	3,000	3,000
10-414-2400	OFFICE EXP, SUPPLIES, POSTAGE	723.78	566.60	268	400	400
10-414-3100	PROFESSIONAL SERVICES	104,885.00	130,882.90	15,000	18,000	18,000
10-414-3110	PROSECUTION ATTORNEY	.00	.00	58,950	83,100	83,100
10-414-3120	PUBLIC DEFENDER SERVICES	56,249.58	75,689.40	37,055	37,200	37,200
10-414-3150	CONFLICT PROSECUTION	7,855.22	2,357.80	5,177	5,000	5,000
10-414-3160	SPECIAL LEGAL SERVICES	.00	11,456.79	9,117	14,700	14,700
	TOTAL SERVICES & SUPPLIES	174,078.03	222,888.45	127,430	164,750	164,400
	TOTAL CITY ATTORNEY	174,078.03	222,888.45	127,430	164,750	164,400

VERNAL CITY CORPORATION
PROPOSED BUDGET
MAY 31, 2020
GENERAL FUND

		FY-2018	FY-2019	YTD ACTUAL	BUD-2020	BUD-2021
	CITY ADMINISTRATION					
	WAGES & BENEFITS:					
10-415-1103	PERM EMPLOYEES/ REG HOURS	61,088.29	178,702.83	178,250	221,000	221,000
10-415-1104	PERM EMPLOYEES/ OT HOURS	3,182.28	4,080.25	1,298	2,000	2,000
10-415-1105	PART-TIME EMPLOYEE/ REG HOURS	24,945.69	27,002.21	0	0	0
10-415-1311	LONG TERM DISABILITY	500.88	1,040.58	869	1,300	1,300
10-415-1313	F I C A	6,426.22	15,275.29	13,326	17,000	17,000
10-415-1314	RETIREMENT/CITY FOR EMPLOYEE	16,359.73	38,618.57	33,277	41,000	41,000
10-415-1316	MEDICAL INSURANCE	18,024.86	40,304.64	35,008	40,000	40,000
10-415-1317	WORKERS COMP.	651.91	6,826.29	3,283	5,000	5,000
	TOTAL WAGES & BENEFITS	131,179.86	311,850.66	265,310	327,300	327,300
	SERVICES & SUPPLIES:					
10-415-2100	BOOKS, SUBSCRIPT, MEMBERSHIPS	760.00	7,969.96	4,939	5,000	5,000
10-415-2200	PUBLIC NOTICES	318.54	1,006.79	260	700	700
10-415-2250	PUBLIC INFORMATION	.00	2,072.05	1,423	5,000	5,000
10-415-2300	TRAVEL	2,588.99	4,306.37	2,679	3,500	3,500
10-415-2400	OFFICE EXP, SUPPLIES, POSTAGE	5,101.98	4,792.17	2,876	5,000	5,000
10-415-2500	EQPMT: SUPPLIES & MAINTENANCE	540.00	392.86	304	2,000	2,000
10-415-2800	TELEPHONE	21,197.89	21,424.61	15,465	23,000	23,000
10-415-2900	FUEL	.00	614.08	398	900	900
10-415-4100	INSURANCE PREMIUMS	149,455.05	158,180.19	147,494	163,000	163,000
10-415-4101	RETIREE MEDICAL INSURANCE	4,000.00	4,384.00	1,987	3,800	3,800
10-415-4102	HEALTH SAVINGS PLAN	41,727.01	60,180.21	48,445	50,000	50,000
10-415-4110	UNINSURED REPAIRS	35,473.28	5,377.14	3,124	4,000	4,000
10-415-4620	PERSONNEL TESTING	3,039.45	4,837.99	1,881	3,000	3,000
	TOTAL SERVICES & SUPPLIES	264,202.19	275,538.42	231,273	268,900	268,900
	TOTAL CITY ADMINISTRATION	395,382.05	587,389.08	496,583	596,200	596,200

		FY-2018	FY-2019	YTD ACTUAL	BUD-2020	BUD-2021
	GOVERNMENT FACILITIES					
	WAGES & BENEFITS:					
10-416-1103	PERM EMPLOYEES/ REG HOURS	218,926.77	174,152.25	167,041	220,000	220,000
10-416-1104	PERM EMPLOYEES/ OT HOURS	733.92	313.90	671	1,000	1,000
10-416-1311	LONG TERM DISABILITY	1,224.74	816.15	847	1,400	1,400
10-416-1313	F I C A	15,811.82	12,679.56	12,669	17,000	17,000
10-416-1314	RETIREMENT/CITY FOR EMPLOYEE	39,048.18	29,259.69	30,208	41,000	41,000
10-416-1316	MEDICAL INSURANCE	67,665.41	57,730.25	48,811	68,000	68,000
10-416-1317	WORKERS COMP.	6,420.35	8,488.64	5,373	7,000	7,000
	TOTAL WAGES & BENEFITS	349,831.19	283,440.44	265,620	355,400	355,400
	SERVICES & SUPPLIES:					
10-416-2300	TRAVEL	.00	347.31	81	400	400
10-416-2400	OFFICE EXP, SUPPLIES, POSTAGE	2.25	2.61	1	100	100
10-416-2500	EQPMT: SUPPLIES & MAINTENANCE	428.98	2,128.26	2,327	2,500	2,500
10-416-2550	TOOLS & WORKING SUPPLIES	491.07	274.51	244	750	750
10-416-2600	BLDG & GRNDS: SUPPLIES & MAINT	27,750.34	28,572.72	13,998	27,000	29,000
10-416-2650	BLDG: JANITORIAL SUPPLIES	3,714.72	3,530.43	6,077	6,000	6,000
10-416-2700	UTILITIES - PUBLIC WORKS	32,820.90	32,442.16	29,512	38,000	38,000
10-416-2800	TELEPHONE	1,662.54	1,541.66	1,332	2,100	2,100
10-416-2900	FUEL	2,170.18	2,460.71	2,607	3,000	3,000
10-416-3100	PROFESSIONAL SERVICES	5,513.60	24,254.63	4,759	12,000	12,000
10-416-3810	OTHER RENT: MUN BLDG AUTH	83,869.90	79,381.80	72,259	90,000	90,000
10-416-4521	UNIFORMS	1,697.92	1,700.78	1,718	2,300	2,300
	TOTAL SERVICES & SUPPLIES	160,122.40	176,637.58	134,914	184,150	186,150
	CAPITAL EQUIPMENT:					
10-416-5002	PARKING LOT STRIPING/CAULKING	.00	206.17	0	0	0
10-416-5005	COUNTER TOP - PLANNING / ZONE	.00	149.23	3,303	3,400	0
10-416-5006	SNOW MELT CONTROLLER	.00	133.57	0	0	0
	TOTAL CAPITAL EQUIPMENT	.00	488.97	3,303	3,400	0
	CAPITAL IMPROVE/PROJECTS:					
10-416-5512	AED DEFIBRILATORS- 4	.00	2,179.16	0	0	0
	TOTAL CAPITAL IMPROVE/PROJECTS	.00	2,179.16	0	0	0
	TOTAL GOVERNMENT FACILITIES	509,953.59	462,746.15	403,837	542,950	541,550

		FY-2018	FY-2019	YTD ACTUAL	BUD-2020	BUD-2021
	PLANNING & ZONING DEVELOPMENT					
	WAGES & BENEFITS:					
10-418-1103	PERM EMPLOYEES/ REG HOURS	244,662.04	251,976.09	213,560	270,000	270,000
10-418-1104	PERM EMPLOYEES/ OT HOURS	292.49	39.86	118	1,500	1,500
10-418-1311	LONG TERM DISIBILITY	1,376.42	974.44	796	1,500	1,500
10-418-1313	F I C A	17,950.64	18,468.04	15,972	22,000	22,000
10-418-1314	RETIREMENT/CITY FOR EMPLOYEE	43,680.75	46,120.21	40,125	52,000	52,000
10-418-1316	MEDICAL INSURANCE	69,728.32	83,326.24	74,779	100,000	100,000
10-418-1317	WORKERS COMP.	7,694.01	8,327.29	5,344	6,000	6,000
10-418-1318	STATE UNEMPLOYMENT	.00	.00	0	1,000	1,000
	TOTAL WAGES & BENEFITS	385,384.67	409,232.17	350,694	454,000	454,000
	SERVICES & SUPPLIES:					
10-418-2100	BOOKS, SUBSCRIPT, MEMBERSHIPS	640.49	2,471.30	459	1,000	1,885
10-418-2300	TRAVEL	2,768.40	4,739.53	5,088	6,000	7,850
10-418-2400	OFFICE EXP, SUPPLIES, POSTAGE	1,066.26	1,124.04	1,240	1,500	1,500
10-418-2500	MOTORPOOL	1,639.44	2,562.90	778	3,000	3,000
10-418-2550	TOOLS & WORKING SUPPLIES	139.72	493.53	500	500	500
10-418-2600	EQPMT: SUPPLIES & MAINTENANCE	.00	775.14	1,056	1,200	1,200
10-418-2800	TELEPHONE	1,767.32	1,925.71	1,248	2,500	2,500
10-418-2805	AT&T DATA	1,315.00	1,365.12	1,025	1,300	1,300
10-418-2900	FUEL	1,713.82	1,725.01	1,176	1,800	1,800
10-418-3100	PROFESSIONAL SERVICES	5,262.40	11,345.00	6,480	10,000	10,000
10-418-3150	PLAN REVIEW	1,085.00	849.41	17,903	28,000	10,000
10-418-3610	TRAINING	1,727.87	1,869.36	923	3,000	5,350
10-418-3611	TRAINING - PLANNING COMMISION	30.00	203.37	0	500	500
10-418-4521	UNIFORMS	769.23	1,068.26	905	1,300	1,100
10-418-4550	SOFTWARE & UPGRADE EXPENSE	3,350.00	3,350.00	3,890	4,400	3,440
	TOTAL SERVICES & SUPPLIES	23,274.95	35,867.68	42,671	66,000	51,925
	CAPITAL EQUIPMENT:					
10-418-5002	COMPUTER	.00	379.29	0	0	0
	TOTAL CAPITAL EQUIPMENT	.00	379.29	0	0	0
	CAPITAL IMPROVE/PROJECTS:					
10-418-5506	GENERAL PLAN UPDATE	.00	.00	0	30,000	0
	TOTAL CAPITAL IMPROVE/PROJECTS	.00	.00	0	30,000	0
	TOTAL PLANNING & ZONING DEVELO	408,659.62	445,479.14	393,364	550,000	505,925

		FY-2018	FY-2019	YTD ACTUAL	BUD-2020	BUD-2021
	I.T. DEPARTMENT					
	WAGES & BENEFITS:					
10-419-1103	PERM EMPLOYEES/ REG HOURS	71,115.43	72,278.77	59,852	72,500	72,500
10-419-1104	PERM EMPLOYEES/ OT HOURS	.00	362.88	726	800	500
10-419-1311	LONG TERM DISIBILITY	402.03	361.51	307	500	500
10-419-1313	F I C A	5,206.27	5,307.75	4,522	6,000	6,000
10-419-1314	RETIREMENT/CITY FOR EMPLOYEE	13,131.31	13,416.93	11,383	13,100	13,100
10-419-1316	MEDICAL INSURANCE	20,536.65	21,929.28	19,309	23,000	23,000
10-419-1317	WORKERS COMP.	621.82	169.58	127	1,000	1,000
	TOTAL WAGES & BENEFITS	111,013.51	113,826.70	96,226	116,900	116,600
	SERVICES & SUPPLIES:					
10-419-2100	BOOKS, SUBSCRIPT, MEMBERSHIPS	.00	27.00	0	50	50
10-419-2300	TRAVEL	199.94	.00	113	200	200
10-419-2400	OFFICE EXP, SUPPLIES, POSTAGE	819.67	958.23	838	1,000	1,000
10-419-2800	TELEPHONE	764.78	490.57	300	750	750
10-419-3100	PROFESSIONAL SERVICES	2,447.88	2,346.03	1,709	2,400	2,400
10-419-4550	SOFTWARE & UPGRADE EXPENSE	6,996.75	7,564.40	6,607	7,500	11,500
10-419-4560	IT REPLACEMENT PARTS	4,275.53	5,443.38	3,565	4,500	10,000
10-419-4570	NETWORK EQPT & MAINTENANCE	2,354.19	3,963.39	1,979	2,000	3,000
10-419-4580	WEB SITE	1,788.00	10,645.37	2,268	2,500	2,500
	TOTAL SERVICES & SUPPLIES	19,646.74	31,438.37	17,380	20,900	31,400
	CAPITAL EQUIPMENT:					
10-419-5001	COMPUTER REPLACEMENT PROGRA	.00	.00	9,021	12,000	8,000
	TOTAL CAPITAL EQUIPMENT	.00	.00	9,021	12,000	8,000
	TOTAL I.T. DEPARTMENT	130,660.25	145,265.07	122,627	149,800	156,000

		FY-2018	FY-2019	YTD ACTUAL	BUD-2020	BUD-2021
	JUSTICE COURT					
	WAGES & BENEFITS:					
10-420-1103	PERM EMPLOYEES/ REG HOURS	179,171.67	183,008.44	151,671	185,500	185,500
10-420-1104	PERM EMPLOYEES/ OT HOURS	.00	10.28	0	1,000	1,000
10-420-1210	COURT OFFICER WAGES	50,044.66	57,915.31	39,922	60,000	60,000
10-420-1311	LONG TERM DISABILITY	1,012.93	906.24	767	1,100	1,100
10-420-1313	F I C A	16,688.67	17,516.65	14,154	16,000	16,000
10-420-1314	RETIREMENT/ CITY FOR EMPLOYEE	33,081.89	33,722.52	28,526	35,000	35,000
10-420-1316	MEDICAL INSURANCE	64,932.68	71,247.30	60,943	74,000	74,000
10-420-1317	WORKERS COMP.	3,567.84	6,506.90	3,206	4,000	4,000
	TOTAL WAGES & BENEFITS	348,500.34	370,833.64	299,189	376,600	376,600
	SERVICES & SUPPLIES:					
10-420-2100	BOOKS, SUBSCRIPT, MEMBERSHIPS	97.25	80.25	0	100	100
10-420-2300	TRAVEL	5,189.15	4,652.72	1,942	4,100	5,500
10-420-2400	OFFICE EXP, SUPPLIES, POSTAGE	4,413.29	2,568.22	1,735	3,000	3,000
10-420-2500	EQPMT: SUPPLIES & MAINTENANCE	104.00	193.98	84	500	500
10-420-2800	TELEPHONE	764.77	310.24	195	800	800
10-420-3100	PROFESSIONAL SERVICES	148.00	413.94	167	1,000	1,000
10-420-4500	SPECIAL DEPARTMENTAL SUPPLIES	.00	.00	0	50	50
10-420-4510	JURY & WITNESS FEES	1,094.75	1,036.00	3,304	3,400	2,000
	TOTAL SERVICES & SUPPLIES	11,811.21	9,255.35	7,425	12,950	12,950
	TOTAL JUSTICE COURT	360,311.55	380,088.99	306,614	389,550	389,550

		FY-2018	FY-2019	YTD ACTUAL	BUD-2020	BUD-2021
	POLICE DEPARTMENT					
	WAGES & BENEFITS:					
10-421-1103	PERM EMPLOYEES/ REG HOURS	1,399,881.11	1,429,946.02	1,138,203	1,475,000	1,475,000
10-421-1104	PERM EMPLOYEES/ OT HOURS	82,800.92	109,620.83	96,085	90,000	90,000
10-421-1215	ALCOHOL PATROL WAGES	40,691.97	34,784.05	29,770	35,000	35,000
10-421-1311	LONG TERM DISABILITY	6,821.40	6,193.91	5,004	8,600	8,600
10-421-1313	F I C A	111,464.60	115,405.65	94,522	113,000	113,000
10-421-1314	RETIREMENT/ CITY FOR EMPLOYEE	432,999.54	428,313.98	342,577	480,000	480,000
10-421-1316	MEDICAL INSURANCE	427,325.82	455,865.25	397,136	500,000	500,000
10-421-1317	WORKERS COMP.	52,141.04	54,393.28	36,617	43,500	43,500
10-421-1318	STATE UNEMPLOYMENT	.00	.00	0	5,000	0
10-421-1319	UNIFORM ALLOWANCE	26,740.00	21,865.00	20,413	22,450	22,450
	TOTAL WAGES & BENEFITS	2,580,866.40	2,656,387.97	2,160,328	2,772,550	2,767,550
	SERVICES & SUPPLIES:					
10-421-2100	BOOKS, SUBSCRIPT, MEMBERSHIPS	3,507.54	3,138.04	723	2,900	2,900
10-421-2200	PUBLIC NOTICES	.00	.00	0	100	100
10-421-2300	TRAVEL	13,692.10	21,402.40	9,236	9,000	15,000
10-421-2310	STATE REIMBURSED TRAVEL EXPEN	592.87	332.53	298	500	500
10-421-2400	OFFICE EXP, SUPPLIES, POSTAGE	9,860.18	12,107.91	9,144	13,000	13,000
10-421-2500	EQPMT: SUPPLIES & MAINTENANCE	14,707.02	22,127.94	10,267	18,000	18,000
10-421-2800	TELEPHONE	10,200.00	10,280.00	9,980	11,000	11,000
10-421-2900	FUEL	48,359.03	52,667.01	36,314	44,000	44,000
10-421-3100	PROFESSIONAL SERVICES	100.00	175.00	0	750	750
10-421-3600	EDUCATION	11,682.94	12,367.18	14,822	15,000	13,500
10-421-3700	MAINTENANCE AGREEMENTS	19,078.30	31,440.54	29,881	30,000	27,500
10-421-3820	CHILD ABUSE PROGRAM	.00	.00	200	200	0
10-421-3822	DARE/NOVA PROGRAM	4,235.00	3,000.00	3,175	4,500	5,500
10-421-4410	COMMUNITY RELATIONS	1,049.91	1,323.05	446	750	750
10-421-4510	SPECIAL PUBLIC SAFETY	8,286.61	7,814.78	5,836	11,000	11,000
10-421-4513	CANINE EXPENSE	3,794.82	3,210.18	1,794	2,500	2,000
10-421-4701	CITY SHARE: CONS DISPATCH	101,885.00	136,417.00	143,228	143,500	145,000
10-421-4800	VEHICLE LEASE PROGRAM	.00	203,685.57	140,860	145,100	145,000
	TOTAL SERVICES & SUPPLIES	251,031.32	521,489.13	416,204	451,800	455,500
	CAPITAL EQUIPMENT:					
10-421-5002	JAG GRANT - 16A187	4,547.55	.00	0	0	0
10-421-5003	TASERS	4,084.36	1,171.65	3,970	4,000	4,000
10-421-5019	LAPTOP COMPUTER	1,434.86	.00	0	0	0
10-421-5043	FIREARMS AMMUNITION	4,876.60	1,591.80	2,994	5,000	5,000
10-421-5049	TACTICAL TEAM TRAINING	.00	.00	61	1,500	1,500
10-421-5057	EMERGENCY MANGMT - TAHL EHLER	13,623.74	16,615.05	0	0	0
	TOTAL CAPITAL EQUIPMENT	28,567.11	19,378.50	7,026	10,500	10,500

		FY-2018	FY-2019	YTD ACTUAL	BUD-2020	BUD-2021
	TRANSFER TO OTHER FUNDS:					
10-421-7001	BEER/ALCOHOL TAX EXPENSE	9,000.00	11,500.00	16,035	16,100	5,000
10-421-7002	I.C.A.C. GRANT	4,714.47	6,140.30	3,257	8,000	8,000
10-421-7003	S.A.F.G. GRANT	2,137.80	7,687.46	0	5,000	0
	TOTAL TRANSFERS - OTHER FUNDS	15,852.27	25,327.76	19,292	29,100	13,000
	TOTAL POLICE DEPARTMENT	2,876,317.10	3,222,583.36	2,602,850	3,263,950	3,246,550

		FY-2018	FY-2019	YTD ACTUAL	BUD-2020	BUD-2021
	FIRE DEPARTMENT					
	WAGES & BENEFITS:					
10-422-1105	PART-TIME EMPLOYEE/ REG HOURS	.00	.00	8,353	0	0
10-422-1107	VERNAL CITY EXPENSE	3,465.12	4,547.89	3,519	3,550	3,550
10-422-1203	TEMP EMPLOYEES/ CITY FIRES	.00	.00	23,175	0	0
10-422-1311	LONG TERM DISABILITY	.00	.00	42	0	0
10-422-1313	F I C A	.00	.00	2,552	0	0
10-422-1314	RETIREMENT/ CITY FOR EMPLOYEE	.00	.00	1,863	0	0
10-422-1316	MEDICAL INSURANCE	.00	.00	57,824	0	0
10-422-1317	WORKERS COMP.	.00	.00	1,016	0	0
	TOTAL WAGES & BENEFITS	3,465.12	4,547.89	98,343	3,550	3,550
	SERVICES & SUPPLIES:					
10-422-2400	OFFICE EXP, SUPPLIES, POSTAGE	.00	.00	166	0	0
10-422-4501	PUBLIC EDUCATION	1,500.00	1,500.00	0	1,500	1,500
	TOTAL SERVICES & SUPPLIES	1,500.00	1,500.00	166	1,500	1,500

VERNAL CITY CORPORATION
PROPOSED BUDGET
MAY 31, 2020
GENERAL FUND

	FY-2018	FY-2019	YTD ACTUAL	BUD-2020	BUD-2021
TOTAL FIRE DEPARTMENT	4,965.12	6,047.89	98,509	5,050	5,050

		FY-2018	FY-2019	YTD ACTUAL	BUD-2020	BUD-2021
	VICTIMS ADVOCATE					
	WAGES & BENEFITS:					
10-423-1103	PERMANENT EMPLOYEES/ REG HOU	21,669.72	16,050.85	28,637	35,000	35,000
10-423-1104	PERMANENT EMPLOYEES/OT	.00	.00	645	500	500
10-423-1107	VAWA PAYROLL	54,705.46	34,920.30	0	0	0
10-423-1108	VOCA PAYROLL	.00	30,898.48	56,666	68,000	68,000
10-423-1311	LONG TERM DISABILITY	91.30	81.13	132	200	200
10-423-1313	F I C A	1,685.65	1,341.76	2,061	2,200	2,200
10-423-1314	RETIREMENT/ CITY FOR EMPLOYEE	2,659.04	2,988.18	6,539	7,300	7,300
10-423-1316	MEDICAL INSURANCE	366.23	8,073.30	14,854	20,000	20,000
10-423-1317	WORKERS COMP.	388.33	1,212.91	887	1,100	1,100
10-423-1407	VAWA RETIRMENT	9,411.08	5,060.40	0	0	0
10-423-1408	VAWA F I C A	4,184.93	2,309.73	0	0	0
10-423-1417	VAWA LONG TERM DISABILITY	283.93	142.93	0	0	0
10-423-1418	VAWA MEDICAL INSURANCE	1,546.73	665.50	0	0	0
10-423-1419	VAWA STATE INSURANCE FUND	1,295.39	1,289.15	0	0	0
10-423-1507	VOCA RETIRMENT	.00	4,803.77	9,264	11,000	11,000
10-423-1508	VOCA F I C A	.00	2,480.81	4,208	5,100	5,100
10-423-1517	VOCA LONG TERM DISABILITY	.00	135.52	231	500	500
10-423-1518	VOCA MEDICAL INSURANCE	.00	8,882.25	18,943	22,500	22,500
10-423-1519	VOCA STATE INSURANCE FUND	.00	202.22	1,791	2,500	2,500
10-423-1520	VOCA TRAVEL AND TRAINING	.00	.00	3,272	4,000	6,100
	TOTAL WAGES & BENEFITS	98,287.79	121,539.19	148,130	179,900	182,000
	SERVICES & SUPPLIES:					
10-423-2300	TRAVEL	2,407.87	1,922.51	714	3,000	3,000
10-423-2400	OFFICE SUPPLIES, POSTAGE	1,418.62	1,368.35	922	1,500	1,500
10-423-2500	EQPMT: SUPPLIES & MAINTENANCE	633.62	1,030.34	306	1,500	1,500
10-423-2800	CELL PHONE	1,192.32	1,354.24	1,810	2,300	2,300
10-423-2900	FUEL	1,000.17	1,669.61	830	1,500	1,500
10-423-3610	TRAINING	789.79	297.59	280	800	800
10-423-4500	SPECIAL DEPARTMENTAL SUPPLIES	1,109.57	2,369.95	1,200	1,500	1,500
10-423-4521	UNIFORMS	.00	303.89	163	300	300
10-423-4600	V.A. CONTRIBUTION EXPENSE	2,309.69	6,313.09	899	4,000	4,000
	TOTAL SERVICES & SUPPLIES	10,861.65	16,629.57	7,123	16,400	16,400
	CAPITAL EQUIPMENT:					
10-423-5004	VEHICLE	.00	23,720.00	0	0	0
	TOTAL CAPITAL EQUIPMENT	.00	23,720.00	0	0	0
	TOTAL VICTIMS ADVOCATE	109,149.44	161,888.76	155,253	196,300	198,400

		FY-2018	FY-2019	YTD ACTUAL	BUD-2020	BUD-2021
	ANIMAL SHELTER					
	SERVICES & SUPPLIES:					
10-426-2400	OFFICE EXP, SUPPLIES, POSTAGE	.00	.00	76	0	0
	TOTAL SERVICES & SUPPLIES	.00	.00	76	0	0
	TOTAL ANIMAL SHELTER	.00	.00	76	0	0

		FY-2018	FY-2019	YTD ACTUAL	BUD-2020	BUD-2021
	STREETS DEPARTMENT					
	WAGES & BENEFITS:					
10-441-1103	PERM EMPLOYEES/ REG HOURS	461,475.07	462,963.49	377,924	480,000	480,000
10-441-1104	PERM EMPLOYEES/ OT HOURS	14,018.37	30,728.87	24,400	35,000	35,000
10-441-1108	WAGES - HOLLY-DAYS	32,363.32	11,117.36	37,742	40,000	40,000
10-441-1311	LONG TERM DISABILITY	2,802.13	2,470.32	2,180	3,100	3,100
10-441-1313	F I C A	37,247.61	37,184.21	33,383	40,000	40,000
10-441-1314	RETIREMENT/ CITY FOR EMPLOYEE	88,799.58	90,657.47	77,956	95,000	95,000
10-441-1316	MEDICAL INSURANCE	172,037.92	159,647.79	127,524	190,000	190,000
10-441-1317	WORKERS COMP.	36,455.27	30,459.91	17,218	30,000	30,000
10-441-1318	STATE UNEMPLOYMENT	.00	.00	0	2,000	0
	TOTAL WAGES & BENEFITS	845,199.27	825,229.42	698,328	915,100	913,100
	SERVICES & SUPPLIES:					
10-441-2100	BOOKS, SUBSCRIPT, MEMBERSHIPS	.00	.00	0	600	600
10-441-2300	TRAVEL	2,234.65	3,872.00	3,604	4,100	4,100
10-441-2400	OFFICE SUPPLIES	781.87	333.97	61	1,000	2,600
10-441-2500	EQPMT: SUPPLIES & MAINTENANCE	78,431.37	66,305.95	73,080	80,000	80,000
10-441-2800	TELEPHONE	3,214.04	2,708.39	3,065	3,400	3,400
10-441-2900	FUEL	24,681.33	34,291.61	21,810	24,000	30,000
10-441-3100	PROFESSIONAL & TECH SERVICES	4,952.50	5,860.00	2,640	5,000	5,000
10-441-3110	LAND FILL FEES	4,000.00	2,000.00	4,000	5,000	2,000
10-441-3610	TRAINING	4,020.00	3,840.00	3,816	4,200	4,200
10-441-4521	UNIFORMS	4,719.95	4,325.25	4,636	6,000	6,000
10-441-4530	SPECIAL HIGHWAY SUPPLIES	47,437.99	88,423.26	37,764	85,000	85,000
10-441-4532	ROAD PAINT STRIPING	120,794.00	85,966.00	875	65,000	70,000
10-441-4534	SIDEWALK HAZARD REPAIR	65,015.00	49,909.50	42,454	50,000	50,000
10-441-4535	CHIP AND SEAL ROADS	.00	.00	0	400,000	350,000
10-441-4550	SOFTWARE & UPGRADE EXPENSE	443.72	1,045.67	12	500	1,000
10-441-4630	STREET ENHANCEMENTS	9,691.62	6,792.82	3,312	10,000	10,000
10-441-4640	STREET LIGHTING	239,475.46	237,721.63	200,656	240,000	240,000
	TOTAL SERVICES & SUPPLIES	609,893.50	593,396.05	401,784	983,800	943,900
	TOTAL STREETS DEPARTMENT	1,455,092.77	1,418,625.47	1,100,112	1,898,900	1,857,000

		FY-2018	FY-2019	YTD ACTUAL	BUD-2020	BUD-2021
	MOTOR POOL					
	WAGES & BENEFITS:					
10-444-1103	PERM EMPLOYEES/ REG HOURS	119,137.02	95,965.19	99,612	122,000	122,000
10-444-1104	PERM EMPLOYEES/ OT HOURS	741.12	1,032.57	1,492	1,500	1,500
10-444-1311	LONG TERM DISABILITY	673.10	467.45	511	700	700
10-444-1313	F I C A	8,723.83	7,123.42	7,583	9,200	9,200
10-444-1314	RETIREMENT/ CITY FOR EMPLOYEE	21,999.21	17,098.82	18,038	23,000	23,000
10-444-1316	MEDICAL INSURANCE	32,595.76	24,971.13	31,768	37,000	37,000
10-444-1317	WORKERS COMP.	2,987.73	5,937.43	3,209	4,100	4,100
	TOTAL WAGES & BENEFITS	186,857.77	152,596.01	162,213	197,500	197,500
	SERVICES & SUPPLIES:					
10-444-2300	TRAVEL	169.00	824.12	362	400	600
10-444-2400	OFFICE EXP, SUPPLIES, POSTAGE	75.78	.00	0	250	250
10-444-2500	EQPMT: SUPPLIES & MAINTENANCE	7,313.79	4,551.17	18,192	8,000	8,000
10-444-2800	TELEPHONE	812.54	443.31	589	800	800
10-444-2900	FUEL	1,938.01	3,560.17	1,389	2,300	2,300
10-444-2950	FUEL - SERVICE CHARGE	3,141.40	3,781.18	2,502	3,300	3,300
10-444-3610	TRAINING	480.00	.00	0	0	500
10-444-4521	UNIFORMS	716.54	824.71	80	900	900
10-444-4522	SMALL TOOLS	1,454.99	1,336.17	507	1,000	1,000
	TOTAL SERVICES & SUPPLIES	16,102.05	15,320.83	23,620	16,950	17,650
	CAPITAL EQUIPMENT:					
10-444-5003	VEHICLE SOFTWARE UPGRADES	813.39	.00	200	350	0
	TOTAL CAPITAL EQUIPMENT	813.39	.00	200	350	0
	TOTAL MOTOR POOL	203,773.21	167,916.84	186,033	214,800	215,150

		FY-2018	FY-2019	YTD ACTUAL	BUD-2020	BUD-2021
	PARKWAYS/BOULEVARDS					
	WAGES & BENEFITS:					
10-451-1103	PERMANENT EMPLOYEES/REG HOU	71,820.53	114,189.31	64,584	75,000	75,000
10-451-1104	PERM EMPLOYEES/ OT HOURS	3,578.03	7,675.45	2,227	8,000	8,000
10-451-1311	LONG TERM DISABILITY	426.66	607.23	323	600	600
10-451-1313	F I C A	5,797.27	8,923.60	4,977	8,000	8,000
10-451-1314	RETIREMENT/ CITY FOR EMPLOYEES	12,564.99	20,333.66	10,986	15,000	15,000
10-451-1316	MEDICAL INSURANCE	17,161.86	47,810.87	32,255	44,000	44,000
10-451-1317	WORKERS COMP.	2,899.37	4,666.61	2,106	2,500	2,500
	TOTAL WAGES & BENEFITS	114,248.71	204,206.73	117,459	153,100	153,100
	SERVICES & SUPPLIES:					
10-451-2300	TRAVEL	2,014.86	1,746.00	1,200	2,000	2,000
10-451-2400	OFFICE EXP, SUPPLIES, POSTAGE	57.48	26.55	40	200	200
10-451-2500	EQUIPMENT-SUPPLIES & MAINT	2,587.47	5,307.32	5,340	6,000	5,000
10-451-2600	MAIN STREET EXPENSE	72,067.81	73,957.38	11,948	80,000	80,000
10-451-2601	TREE TRIMMING EXPENSE	1,950.00	2,141.25	0	2,000	2,000
10-451-2602	WALKING PARK	11,052.26	14,705.36	8,042	15,000	15,000
10-451-2603	COBBLEROCK PARK	5,741.96	4,301.80	3,405	6,000	7,000
10-451-2607	MAINTENANCE - AGGIE BLVDE	.00	4,299.47	4,113	12,000	12,000
10-451-2608	MAINTENANCE - STATE CONTRACT	.00	1,400.00	1,400	4,200	4,200
10-451-2800	TELEPHONE	25.00	500.00	500	600	600
10-451-2900	FUEL	3,727.46	6,860.42	2,613	5,000	6,000
10-451-3610	TRAINING	.00	.00	590	600	600
10-451-4521	UNIFORMS	1,319.66	1,148.33	952	1,500	1,500
10-451-4533	TREE REMOVAL & REPLANTING	.00	.00	0	0	1,000
10-451-4534	BANNER REPLACEMENT & REPAIR	7,160.47	11,482.20	2,332	4,000	4,000
10-451-4600	BILLBOARD LEASE	834.78	1,619.22	2,060	2,100	2,100
	TOTAL SERVICES & SUPPLIES	108,539.21	129,495.30	44,535	141,200	143,200
	CAPITAL IMPROVE/PROJECTS:					
10-451-5508	TREE BOXES / BRICK	10,000.00	9,963.00	0	10,000	10,000
	TOTAL CAPITAL IMPROVE/PROJECTS	10,000.00	9,963.00	0	10,000	10,000
	TOTAL PARKWAYS/BOULEVARDS	232,787.92	343,665.03	161,994	304,300	306,300

		FY-2018	FY-2019	YTD ACTUAL	BUD-2020	BUD-2021
	TRANSFERS & CONTRIBUTIONS					
	TRANSFER TO OTHER FUNDS:					
10-480-7105	TRANS DEBT SERV:CIB ST 2001A	67,600.00	67,100.00	0	68,000	68,000
10-480-7106	TRANS DEBT SERV: CIB ST 2001B	53,000.00	53,000.00	0	53,000	47,000
10-480-7111	TRANS DEBT SERV: CIB 2003	77,000.00	77,000.00	0	77,000	77,500
10-480-7137	TRANS: DEBT SERV CIB 03 /MUS	32,800.00	.00	0	0	0
10-480-7138	TRANS: DEBT 2009 B	.00	38,000.00	0	39,000	38,000
10-480-7158	TRANS MBA: SALES TAX FOR BOND	361,255.22	291,454.36	197,938	265,000	265,000
	TOTAL TRANSFERS - OTHER FUNDS	591,655.22	526,554.36	197,938	502,000	495,500
	CONTRIBUTIONS - OTHER AGENCIES					
10-480-7330	CONTRIB TO COUNTY: GRANT WRITE	.00	.00	25,000	25,000	25,000
10-480-7331	CONTRIB TO COUNTY: INNOVATION	.00	.00	0	0	5,000
10-480-7333	CONTRIB TO COUNTY: CEMTERY IMP	150.00	399.52	39,420	50,000	50,000
10-480-7337	CONTRIB TO COUNTY: CEMETERY	94,669.85	64,091.91	78,070	110,000	110,000
10-480-7338	CONTRIB TO CONFERENCE CENTER	200,000.00	200,000.00	200,000	200,000	0
10-480-7339	CONTRIB TO U.B.N.S.F.	7,500.00	8,500.00	0	8,500	8,500
10-480-7341	STATE COURT SURCHARGE	157,484.56	177,254.61	123,176	155,000	155,000
10-480-7344	CDA - SALES TAX	.00	.00	0	45,000	45,000
10-480-7359	LEASE PAYMENTS A - MBA	107,000.00	.00	107,000	107,000	107,000
10-480-7360	LEASE PAYMENTS B - MBA	119,025.00	.00	119,425	120,000	120,000
	TOTAL CONTRIB - OTHER AGENCIES	685,829.41	450,246.04	692,090	820,500	625,500
	TOTAL TRANSFERS & CONTRIBUTION	1,277,484.63	976,800.40	890,028	1,322,500	1,121,000
	TOTAL FUND EXPENDITURES	9,036,559.84	9,494,954.43	7,842,721	10,564,600	10,265,125
	NET REVENUE OVER EXPENDITURES	936,534.27	332,551.31	(1,455,321)	0	0

VERNAL CITY CORPORATION
PROPOSED BUDGET
MAY 31, 2020
NARCOTICS STRIKE FORCE FUND

		FY-2018	FY-2019	YTD ACTUAL	BUD-2020	BUD-2021
	MISCELLANEOUS SERVICES					
21-360-6100	INTEREST EARNINGS	1,307.67	2,555.74	3,219	0	3,000
21-360-6101	INTEREST EARNINGS-VSF	1,822.26	2,362.03	0	0	0
21-360-6410	SALE OF SURPLUS PROPERTY	1,675.00	.00	0	0	0
21-360-6412	RESTITUTION	1,912.00	6,536.60	1,093	0	0
	TOTAL MISCELLANEOUS SERVICES	6,716.93	11,454.37	4,311	0	3,000
	REVENUE AND CONTRIBUTIONS					
21-382-8211	DEPT OF CRIMINAL JUSTICE GRANT	59,586.00	61,730.88	51,963	61,000	61,000
21-382-8212	DUCHESNE COUNTY SHARE	7,500.00	8,500.00	14,500	8,500	8,500
21-382-8213	UINTAH COUNTY SHARE	7,500.00	8,500.00	14,500	8,500	8,500
21-382-8214	VERNAL CITY SHARE	7,500.00	8,500.00	0	8,500	8,500
21-382-8215	ROOSEVELT CITY SHARE	7,500.00	8,500.00	14,500	8,500	8,500
21-382-8218	NAPLES CITY SHARE	7,500.00	8,500.00	8,500	8,500	8,500
21-382-8222	MISCELLANEOUS REVENUE	1,685.17	.00	0	0	0
21-382-8900	USE OF BEGINNING FUND BALANCE	.00	.00	0	8,000	5,000
	TOTAL REVENUE AND CONTRIBUTIO	98,771.17	104,230.88	103,963	111,500	108,500
	TOTAL FUND REVENUE	105,488.10	115,685.25	108,274	111,500	111,500

VERNAL CITY CORPORATION
PROPOSED BUDGET
MAY 31, 2020
NARCOTICS STRIKE FORCE FUND

		FY-2018	FY-2019	YTD ACTUAL	BUD-2020	BUD-2021
	FUND EXPENDITURES					
	WAGES & BENEFITS:					
21-400-1103	PERM EMPLOYEES/ REG HOURS	78,240.90	77,338.05	66,432	80,000	80,000
21-400-1313	F I C A	5,985.46	5,916.37	5,027	5,000	5,000
21-400-1317	WORKERS COMP.	2,204.65	1,771.83	1,951	2,000	2,000
	TOTAL WAGES & BENEFITS	86,431.01	85,026.25	73,410	87,000	87,000
	SERVICES & SUPPLIES:					
21-400-2300	TRAVEL	1,679.78	2,115.92	1,147	2,000	2,000
21-400-2400	OFFICE EXP, SUPPLIES, POSTAGE	474.29	538.79	419	500	500
21-400-2850	CELLPHONE - SURVEILANCE	287.17	690.68	522	700	700
21-400-3200	MAINTENANCE AGREEMENTS	.00	1,250.00	0	2,000	2,000
21-400-4100	INSURANCE PREMIUMS	9,007.46	8,435.78	7,952	9,000	9,000
21-400-4600	MISCELLANEOUS SUPPLIES	305.67	138.55	0	300	300
21-400-4610	MISCELLANEOUS SERVICES	2,000.00	6,000.00	8,000	10,000	10,000
	TOTAL SERVICES & SUPPLIES	13,754.37	19,169.72	18,041	24,500	24,500
	TOTAL FUND EXPENDITURES	100,185.38	104,195.97	91,451	111,500	111,500
	NET REVENUE OVER EXPENDITURES	5,302.72	11,489.28	16,823	0	0

VERNAL CITY CORPORATION
PROPOSED BUDGET
MAY 31, 2020
UCVC INTERLOCAL - SOCCER FIELD

		FY-2018	FY-2019	YTD ACTUAL	BUD-2020	BUD-2021
	MISCELLANEOUS SERVICES					
24-360-6100	INTEREST EARNINGS	.00	709.97	0	0	0
24-360-6304	BASE RENTS: UINTAH RECREATION	.00	2,493.00	550	0	0
	TOTAL MISCELLANEOUS SERVICES	.00	3,202.97	550	0	0
	TOTAL FUND REVENUE	.00	3,202.97	550	0	0
	FUND EXPENDITURES					
	SERVICES & SUPPLIES:					
24-400-4100	INSURANCE PREMIUMS	2,547.87	2,493.00	0	0	0
	TOTAL SERVICES & SUPPLIES	2,547.87	2,493.00	0	0	0
	TOTAL FUND EXPENDITURES	2,547.87	2,493.00	0	0	0
	NET REVENUE OVER EXPENDITURES	(2,547.87)	709.97	550	0	0

VERNAL CITY CORPORATION
PROPOSED BUDGET
MAY 31, 2020
DEBT SERVICE FUND

		FY-2018	FY-2019	YTD ACTUAL	BUD-2020	BUD-2021
	SPECIAL IMPROVEMENT DISTRICTS					
31-361-3610	INTEREST ON INVESTMENTS	7,198.36	15,439.31	8,083	3,500	8,000
31-361-7010	SID 2013 PMT FROM PPTY OWNERS	3,726.35	.00	0	3,000	0
31-361-7018	SID02-1: PMT FROM PPTY OWNERS	.00	5,544.45	0	0	0
31-361-7019	SID 02-1 INT FROM PPTY OWNERS	828.77	.00	0	0	0
31-361-7020	SID 04-1 PMT FROM PPTY OWNERS	.00	400.00	0	0	0
31-361-7021	SID 04-1 INT FROM PPTY OWNERS	321.90	.00	0	0	0
31-361-7022	SID 06-1 PMT FROM PPTY OWNERS	.00	400.00	0	0	0
31-361-7023	SID 06-1 INT FROM PPTY OWNERS	2,384.11	.00	0	0	0
31-361-7024	SID 08-1 PMT FROM PPTY OWNERS	3,962.18	645.11	0	3,000	1,500
31-361-7025	SID 08-1 INT FROM PPTY OWNERS	.00	443.52	0	0	0
	TOTAL SPECIAL IMPROVEMENT DIST	18,421.67	22,872.39	8,083	9,500	9,500
	CONTRIBUTIONS & TRANSFERS					
31-380-8104	CONTRIBUTIONS	203,444.86	.00	0	0	0
31-380-8106	TRANS GEN FND:CIB ST BOND 2001	120,600.00	120,100.00	0	121,000	116,000
31-380-8107	TRANS GEN FD:CIB REV BOND 2003	32,800.00	.00	0	0	0
31-380-8110	TRANS GEN: CIB REV BOND 2003 B	77,000.00	77,000.00	0	77,000	77,500
31-380-8115	TRANS GEN: CIB 2009 B	38,000.00	38,000.00	0	38,000	38,000
	TOTAL CONTRIBUTIONS & TRANSFER	471,844.86	235,100.00	0	236,000	231,500
	TOTAL FUND REVENUE	490,266.53	257,972.39	8,083	245,500	241,000
	NET REVENUE OVER EXPENDITURES	490,266.53	257,972.39	8,083	245,500	241,000

		FY-2018	FY-2019	YTD ACTUAL	BUD-2020	BUD-2021
	SPECIAL IMPROVEMENT DISTRICTS					
31-361-3610	INTEREST ON INVESTMENTS	7,198.36	15,439.31	8,083	3,500	8,000
31-361-7010	SID 2013 PMT FROM PPTY OWNERS	3,726.35	.00	0	3,000	0
31-361-7018	SID02-1: PMT FROM PPTY OWNERS	.00	5,544.45	0	0	0
31-361-7019	SID 02-1 INT FROM PPTY OWNERS	828.77	.00	0	0	0
31-361-7020	SID 04-1 PMT FROM PPTY OWNERS	.00	400.00	0	0	0
31-361-7021	SID 04-1 INT FROM PPTY OWNERS	321.90	.00	0	0	0
31-361-7022	SID 06-1 PMT FROM PPTY OWNERS	.00	400.00	0	0	0
31-361-7023	SID 06-1 INT FROM PPTY OWNERS	2,384.11	.00	0	0	0
31-361-7024	SID 08-1 PMT FROM PPTY OWNERS	3,962.18	645.11	0	3,000	1,500
31-361-7025	SID 08-1 INT FROM PPTY OWNERS	.00	443.52	0	0	0
	TOTAL SPECIAL IMPROVEMENT DIST	18,421.67	22,872.39	8,083	9,500	9,500
	CONTRIBUTIONS & TRANSFERS					
31-380-8104	CONTRIBUTIONS	203,444.86	.00	0	0	0
31-380-8106	TRANS GEN FND:CIB ST BOND 2001	120,600.00	120,100.00	0	121,000	116,000
31-380-8107	TRANS GEN FD:CIB REV BOND 2003	32,800.00	.00	0	0	0
31-380-8110	TRANS GEN: CIB REV BOND 2003 B	77,000.00	77,000.00	0	77,000	77,500
31-380-8115	TRANS GEN: CIB 2009 B	38,000.00	38,000.00	0	38,000	38,000
	TOTAL CONTRIBUTIONS & TRANSFER	471,844.86	235,100.00	0	236,000	231,500
	TOTAL FUND REVENUE	490,266.53	257,972.39	8,083	245,500	241,000

VERNAL CITY CORPORATION
PROPOSED BUDGET
MAY 31, 2020
DEBT SERVICE FUND

		FY-2018	FY-2019	YTD ACTUAL	BUD-2020	BUD-2021
	FUND EXPENDITURES					
	DEBT SERVICE					
31-470-6130	2017 ZIONS BOND TRUST FEE'S	.00	2,250.00	1,500	2,500	2,500
31-470-6372	CIB 2001A ST BOND PRINCIPAL	60,000.00	61,000.00	63,000	63,000	65,000
31-470-6373	CIB 2001A STREET BOND INTEREST	7,575.00	6,075.00	4,550	5,000	4,000
31-470-6374	CIB 2001B ST BOND PRINCIPAL	53,000.00	53,000.00	53,000	53,000	47,000
31-470-6375	CIB 2003 REV. BOND PRINCIPAL	229,000.00	.00	0	0	0
31-470-6376	CIB 2003 REV. BOND INTEREST	7,169.86	.00	0	0	0
31-470-6380	CIB 2003B REV. BOND PRINCIPAL	58,000.00	60,000.00	61,000	61,000	65,000
31-470-6381	CIB 2003B REV. BOND INTEREST	18,300.00	16,850.00	15,350	16,000	12,500
31-470-6535	CIB 2009B REV BOND	37,000.00	37,000.00	37,000	37,000	37,000
31-470-6536	CIB 2009B TRUST FEE'S	3,250.00	2,000.00	1,500	2,000	2,000
31-470-6538	CIB 2014 S.A.A. BOND	.00	.00	6,000	6,000	6,000
	TOTAL DEBT SERVICE	473,294.86	238,175.00	242,900	245,500	241,000
	TOTAL FUND EXPENDITURES	473,294.86	238,175.00	242,900	245,500	241,000
	NET REVENUE OVER EXPENDITURES	16,971.67	19,797.39	(234,817)	0	0

VERNAL CITY CORPORATION
PROPOSED BUDGET
MAY 31, 2020
STREET CONSTRUCTION FUND

		FY-2018	FY-2019	YTD ACTUAL	BUD-2020	BUD-2021
	FUND REVENUE					
35-300-3610	INTEREST ON INVESTMENTS	4,556.29	6,103.74	3,880	5,000	0
35-300-8900	USE OF BEGINNING FUND BALANCE	.00	.00	0	310,000	55,000
	TOTAL FUND REVENUE	4,556.29	6,103.74	3,880	315,000	55,000
	TOTAL FUND REVENUE	4,556.29	6,103.74	3,880	315,000	55,000
	FUND EXPENDITURES					
	CAPITAL EQUIPMENT					
35-400-5501	2019 UDOT STREET PROJECT	.00	1,230.00	211,968	250,000	0
35-400-5508	SAFETY SIDEWALK MATCH	1,992.50	2,151.24	0	0	0
35-400-5509	ADA SIDEWALK REPAIR	50,000.00	46,355.00	0	50,000	50,000
35-400-5510	SAFE SIDEWALK 500 N-UBH SR121	.00	.00	2,395	5,000	0
35-400-5511	SAFE ROUTES - 500 WEST	.00	.00	9,943	5,000	0
35-400-5516	CURB,GUTTER,SIDEWALK REPLACE	5,000.00	5,000.00	0	5,000	5,000
	TOTAL CAPITAL EQUIPMENT	56,992.50	54,736.24	224,305	315,000	55,000
	TOTAL FUND EXPENDITURES	56,992.50	54,736.24	224,305	315,000	55,000
	NET REVENUE OVER EXPENDITURES	(52,436.21)	(48,632.50)	(220,425)	0	0
	FUND EXPENDITURES					
	CAPITAL EQUIPMENT					
36-400-5501	PROF & TECH SERVICES	15.23	.00	0	0	0
	TOTAL CAPITAL EQUIPMENT	15.23	.00	0	0	0
	TOTAL FUND EXPENDITURES	15.23	.00	0	0	0
	NET REVENUE OVER EXPENDITURES	(15.23)	.00	0	0	0

VERNAL CITY CORPORATION
PROPOSED BUDGET
MAY 31, 2020
GRANT / GREEN SPACE FUND

		FY-2018	FY-2019	YTD ACTUAL	BUD-2020	BUD-2021
	FUND REVENUE					
38-300-3000	2000 W - LAWN CARE REIMBURSEMT	8,119.47	.00	0	0	0
38-300-6100	INTEREST ON INVESTMENTS	1,015.49	1,825.11	2,583	5,000	0
38-300-6200	ACTIVE/HEALTHY COMMUNITY GRAN	63,000.00	63,000.00	0	0	0
38-300-6202	WAY FINDING MISC. REVENUE	.00	17,000.00	0	0	0
38-300-6203	UDOT GRANT - TRAILS	.00	5,000.00	0	0	0
38-300-6210	INNOVATION CENTER	.00	.00	0	223,000	0
38-300-8900	USE OF BEGINNING FUND BALANCE	.00	.00	0	80,000	0
	TOTAL FUND REVENUE	72,134.96	86,825.11	2,583	308,000	0
	FUND EXPENDITURES					
	CAPITAL EQUIPMENT					
38-400-5508	2000 WEST- LAWN CARE	12,622.16	.00	0	0	0
38-400-5515	ACTIVE/HEALTHY COMMUNITY EXP.	7,958.25	5,719.17	1,710	5,000	0
38-400-5516	RECREATION - WAYFINDING PROJCT	.00	.00	39	25,000	0
38-400-5517	UDOT - TRAILS EXPENSE	.00	9,384.50	0	0	0
38-400-5518	ACTIVE/HEALTHY - WAYFINDING	.00	57,540.00	10,509	50,000	0
38-400-5520	MASTER PLAN	.00	.00	0	5,000	0
38-400-5522	INNOVATION EXPENSE - 2019	.00	.00	24,727	223,000	0
	TOTAL CAPITAL EQUIPMENT	20,580.41	72,643.67	36,984	308,000	0
	TOTAL FUND EXPENDITURES	20,580.41	72,643.67	36,984	308,000	0
	NET REVENUE OVER EXPENDITURES	51,554.55	14,181.44	(34,402)	0	0

VERNAL CITY CORPORATION
PROPOSED BUDGET
MAY 31, 2020
CITY STORM DRAIN PROJECT

		FY-2018	FY-2019	YTD ACTUAL	BUD-2020	BUD-2021
	FUND REVENUE					
39-300-6100	INTEREST EARNINGS	4,950.50	7,053.32	2,557	4,500	0
	TOTAL FUND REVENUE	4,950.50	7,053.32	2,557	4,500	0
	FUND EXPENDITURES					
	CAPITAL EQUIPMENT					
39-400-5505	2018 UDOT MAIN STREET	.00	4,270.00	0	0	0
39-400-8200	TRANSFER TO DEBT	38,000.00	.00	0	0	0
	TOTAL CAPITAL EQUIPMENT	38,000.00	4,270.00	0	0	0
39-480-4880	APPROP INCREASE IN FUND BALANC	.00	.00	0	4,500	0
	TOTAL FUND EXPENDITURES	38,000.00	4,270.00	0	4,500	0
	NET REVENUE OVER EXPENDITURES	(33,049.50)	2,783.32	2,557	0	0

VERNAL CITY CORPORATION
PROPOSED BUDGET
MAY 31, 2020
CDA \ VITALIZATION FUND

		FY-2018	FY-2019	YTD ACTUAL	BUD-2020	BUD-2021
	FUND REVENUE					
40-300-3610	INTEREST ON INVESTMENTS	.00	112.16	0	0	0
40-300-3750	CDA PROPERTY TAX - TOWN CENTRE	157,623.11	.00	0	200,000	200,000
	TOTAL FUND REVENUE	157,623.11	112.16	0	200,000	200,000
	FUND EXPENDITURES					
	CAPITAL EQUIPMENT					
40-400-4200	VERNAL EXCITEMENT EVENTS	7,929.00	.00	0	0	0
40-400-4300	COMMUNITY DEVELOPMENT EXPENS	158,503.11	.00	0	185,000	185,000
40-400-4400	REVITALIZATION EXPENSE	34.17	.00	550	15,000	15,000
	TOTAL CAPITAL EQUIPMENT	166,466.28	.00	550	200,000	200,000
	TOTAL FUND EXPENDITURES	166,466.28	.00	550	200,000	200,000
	NET REVENUE OVER EXPENDITURES	(8,843.17)	112.16	(550)	0	0

VERNAL CITY CORPORATION
PROPOSED BUDGET
MAY 31, 2020
MUNICIPAL BLDG PROJECT FUND

		FY-2018	FY-2019	YTD ACTUAL	BUD-2020	BUD-2021
	FUND REVENUE					
41-300-6100	INTEREST EARNINGS	30,076.43	47,256.39	30,931	39,000	0
	TOTAL FUND REVENUE	30,076.43	47,256.39	30,931	39,000	0
41-480-4880	APPROP INCREASE IN FUND BALANC	.00	.00	0	39,000	0
	TOTAL FUND EXPENDITURES	.00	.00	0	39,000	0
	NET REVENUE OVER EXPENDITURES	30,076.43	47,256.39	30,931	0	0

VERNAL CITY CORPORATION
PROPOSED BUDGET
MAY 31, 2020
EQUIPMENT REPLACEMENT FUND

		FY-2018	FY-2019	YTD ACTUAL	BUD-2020	BUD-2021
	FUND REVENUE					
42-300-3610	INTEREST ON INVESTMENT	4,232.63	4,121.84	10,566	15,000	0
42-300-3620	CAPITAL LEASE PROCEEDS	.00	166,757.00	0	0	0
42-300-8300	TRANSFER FROM OTHER FUNDS	.00	479,933.03	0	0	0
42-300-8900	USE OF BEGINNING FUND BALANCE	.00	.00	0	255,000	0
	TOTAL FUND REVENUE	4,232.63	650,811.87	10,566	270,000	0
	FUND EXPENDITURES					
	CAPITAL EQUIPMENT					
42-400-5001	STREET SWEEPER	.00	.00	244,967	270,000	0
42-400-5012	POLICE VEHICLE LEASE	348,686.08	169,647.27	0	0	0
	TOTAL CAPITAL EQUIPMENT	348,686.08	169,647.27	244,967	270,000	0
	TOTAL FUND EXPENDITURES	348,686.08	169,647.27	244,967	270,000	0
	NET REVENUE OVER EXPENDITURES	(344,453.45)	481,164.60	(234,401)	0	0

VERNAL CITY CORPORATION
PROPOSED BUDGET
MAY 31, 2020
HOUSING REHABILITATION

		FY-2018	FY-2019	YTD ACTUAL	BUD-2020	BUD-2021
	FUND REVENUE					
46-300-3304	CDBG GRANT: WOMENS CRISIS CEN	34,000.00	.00	29,345	38,000	38,000
46-300-6100	INTEREST ON INVESTMENT	530.34	267.66	0	0	0
46-300-6910	MISCELLANEOUS REVENUE	3,693.10	.00	0	0	0
	TOTAL FUND REVENUE	38,223.44	267.66	29,345	38,000	38,000
	FUND EXPENDITURES					
	CAPITAL EQUIPMENT					
46-400-1000	UINTAH CNTY HOUSING SPECIALIST	19,000.00	.00	0	0	0
46-400-4810	TRANSFER TO OTHER FUNDS	.00	11,709.34	0	0	0
46-400-5501	CDBG HOUSING REHAB CONSTRUCT	32,513.10	.00	37,909	38,000	38,000
	TOTAL CAPITAL EQUIPMENT	51,513.10	11,709.34	37,909	38,000	38,000
	TOTAL FUND EXPENDITURES	51,513.10	11,709.34	37,909	38,000	38,000
	NET REVENUE OVER EXPENDITURES	(13,289.66)	(11,441.68)	(8,564)	0	0

VERNAL CITY CORPORATION
PROPOSED BUDGET
MAY 31, 2020
EMERGENCY PREPAREDNESS FUND

		FY-2018	FY-2019	YTD ACTUAL	BUD-2020	BUD-2021
	FUND REVENUE					
47-300-6100	INTEREST ON INVESTMENTS	4,454.99	6,527.16	1,415	1,800	0
	TOTAL FUND REVENUE	4,454.99	6,527.16	1,415	1,800	0
47-480-4880	APPROP INCREASE IN FUND BALANC	.00	.00	0	1,800	0
	TOTAL FUND EXPENDITURES	.00	.00	0	1,800	0
	NET REVENUE OVER EXPENDITURES	4,454.99	6,527.16	1,415	0	0

VERNAL CITY CORPORATION
PROPOSED BUDGET
MAY 31, 2020
PARKING LOT FUND

		FY-2018	FY-2019	YTD ACTUAL	BUD-2020	BUD-2021
	FUND REVENUE					
49-300-6100	INTEREST ON INVENSTMENTS	4,986.74	7,590.76	2,902	4,000	0
49-300-8900	USE OF BEGINNING FUND BALANCE	.00	.00	0	119,000	0
	TOTAL FUND REVENUE	4,986.74	7,590.76	2,902	123,000	0
	FUND EXPENDITURES					
	CAPITAL EQUIPMENT					
49-400-5502	DOWNTOWN PARKING	.00	125,140.00	0	123,000	0
	TOTAL CAPITAL EQUIPMENT	.00	125,140.00	0	123,000	0
	TOTAL FUND EXPENDITURES	.00	125,140.00	0	123,000	0
	NET REVENUE OVER EXPENDITURES	4,986.74	(117,549.24)	2,902	0	0

		FY-2018	FY-2019	YTD ACTUAL	BUD-2020	BUD-2021
	WATER REVENUE					
	WATER - OPERATING:					
50-371-3701	METERED SALES-RESIDENTIAL	1,870,923.95	1,827,974.89	1,533,388	1,750,000	1,750,000
50-371-3702	METERED SALES-COMMERCIAL	812,221.22	805,994.46	608,577	750,000	750,000
50-371-3703	SERVICE FEES	7,475.00	2,200.00	2,800	2,000	2,000
50-371-3704	DELINQUENT PENALTIES	15,237.96	15,993.79	11,577	15,000	15,000
50-371-3705	BULK WATER SALES	23,467.51	16,457.62	16,682	20,000	20,000
50-371-3706	MISCELLANEOUS REVENUE	6,949.53	5,230.00	3,485	5,000	5,000
50-371-3709	A V W S D WATER OVERAGE	4,394.25	8,037.00	2,918	0	0
	TOTAL WATER - OPERATING	2,740,669.42	2,681,887.76	2,179,427	2,542,000	2,542,000
	WATER - NON-OPERATING:					
50-372-3711	INTEREST EARNINGS	51,400.47	81,579.19	60,744	50,000	50,000
50-372-3713	IMPACT FEES	10,750.00	11,000.00	10,250	10,000	10,000
50-372-3721	CIB GRANT: METERS	195,956.34	159,216.20	0	0	0
50-372-3726	JOINT WATER 2000 W PAYMNT	7,980.00	7,980.00	7,980	7,980	7,980
	TOTAL WATER - NON-OPERATING	266,086.81	259,775.39	78,974	67,980	67,980
	TOTAL WATER REVENUE	3,006,756.23	2,941,663.15	2,258,401	2,609,980	2,609,980
	WATER EXPENDITURES					
	WAGES & BENEFITS:					
50-510-1103	PERM EMPLOYEES/ REG HOURS	325,140.88	326,643.21	268,670	332,000	332,000
50-510-1104	PERM EMPLOYEES/ OT HOURS	15,931.52	24,218.51	20,297	20,000	20,000
50-510-1307	VACATION	2,869.07	(1,295.46)	0	0	0
50-510-1311	LONG TERM DISABILITY	1,921.70	1,738.11	1,438	2,000	2,000
50-510-1313	F I C A	24,863.61	25,303.92	21,269	26,000	26,000
50-510-1314	RETIREMENT/ CITY FOR EMPLOYEE	89,053.60	86,901.68	52,187	70,000	70,000
50-510-1316	MEDICAL INSURANCE	101,382.97	104,553.52	90,659	115,000	115,000
50-510-1317	WORKERS COMP.	15,503.82	17,256.50	9,084	11,500	11,500
50-510-1318	STATE UNEMPLOYMENT	.00	4,660.14	2,864	5,000	5,000
	TOTAL WAGES & BENEFITS	576,667.17	589,980.13	466,468	581,500	581,500

		FY-2018	FY-2019	YTD ACTUAL	BUD-2020	BUD-2021
	SERVICES & SUPPLIES:					
50-510-2100	BOOKS, SUBSCRIPT, MEMBERSHIPS	1,131.14	149.00	1,185	1,200	1,000
50-510-2200	PUBLIC NOTICES	.00	.00	0	600	600
50-510-2300	TRAVEL	4,719.15	5,393.58	4,588	4,600	6,000
50-510-2400	OFFICE EXP, SUPPLIES, POSTAGE	5,922.11	4,266.86	3,783	5,300	5,300
50-510-2450	MERCHANT BANK FEE'S	13,484.19	15,523.76	11,907	12,000	12,000
50-510-2500	EQPMT: SUPPLIES & MAINTENANCE	8,685.01	18,120.78	16,290	17,000	12,000
50-510-2700	UTILITIES	2,339.18	2,437.75	2,672	2,700	2,700
50-510-2800	TELEPHONE	4,524.55	4,752.13	3,293	5,000	5,000
50-510-2900	FUEL	7,169.73	8,547.13	6,640	7,000	7,000
50-510-3000	TREATED WATER COST	739,975.72	595,312.99	568,059	650,000	650,000
50-510-3100	PROFESSIONAL SERVICES	2,560.00	13,711.00	13,570	12,500	12,000
50-510-3105	METERS ANNUAL SUPPORT	.00	12,538.64	12,914	13,000	13,000
50-510-3110	CONTRACTED LINE REPAIRS	810.00	.00	20,560	20,600	10,000
50-510-3120	LEAD/COPPER SAMPLES	1,372.99	34.40	1,158	3,200	3,200
50-510-4503	WATER DEPOSIT INTEREST	16.98	28.76	20	100	100
50-510-4504	SPECIAL WATER SUPPLIES	82,788.46	101,608.42	95,179	110,000	110,000
50-510-4506	WATER ASSESSMENTS & PURCHASE	29,905.54	33,647.10	33,528	35,000	35,000
50-510-4507	RED FLEET WATER: PUMPING COST	14,092.85	24,211.17	16,441	24,000	24,000
50-510-4508	BLOCK NOTICE J.U. - RED FLEET	84,770.00	84,770.00	84,770	84,800	84,800
50-510-4509	UWCD - J.U. ADDT WATER	102,480.00	102,900.00	102,900	102,900	102,900
50-510-4510	TYZACK REACH III REPAYMENT	10,414.81	9,306.87	10,658	10,700	10,700
50-510-4511	THE DAM EXPENSE	.00	.00	0	25,000	25,000
50-510-4521	UNIFORMS	2,334.48	2,633.97	2,668	3,000	3,000
50-510-4535	BLUE STAKES	.00	1,274.78	988	1,000	1,000
50-510-4550	SOFTWARE UPGRADES	900.00	900.00	1,695	2,500	2,500
50-510-4580	WEB SITE	.00	9,311.86	2,000	2,000	2,000
50-510-4710	INDIRECT SERVICES	606,000.00	606,000.00	454,500	606,000	606,000
50-510-4765	BAD DEBT EXPENSE	2,777.20	284.30	106	5,000	5,000
50-510-4766	DEPRECIATION	547,085.84	613,242.74	0	0	0
	TOTAL SERVICES & SUPPLIES	2,276,259.93	2,270,907.99	1,472,069	1,766,700	1,751,800
	CAPITAL IMPROVE/PROJECTS:					
50-510-5501	WATER MASTER PLAN UPDATE	.00	.00	61,540	80,000	0
50-510-5503	ASHLEY SPRINGS SECURITY	.00	.00	0	40,000	0
50-510-5504	LEAK DETECTION	.00	.00	0	0	30,000
50-510-5506	RAW WATER LINE	985.00	.00	0	0	0
50-510-5507	RADIO READ METERS	.00	.00	155,339	156,000	90,000
	TOTAL CAPITAL IMPROVE/PROJECTS	985.00	.00	216,879	276,000	120,000

VERNAL CITY CORPORATION
PROPOSED BUDGET
MAY 31, 2020
VERNAL CITY UTILITIES FUND

		FY-2018	FY-2019	YTD ACTUAL	BUD-2020	BUD-2021
	DEBT SERVICE:					
50-510-6019	DRINKING WATER BOND PRINCIPLE	.00	.00	16,000	17,000	17,000
50-510-6022	U.W.C.D. CIB STORAGE TANK	4,522.92	4,800.00	4,913	5,000	5,000
50-510-6029	DRINKING WATER BOND INTEREST	1,313.45	981.00	719	750	750
50-510-6036	C.I.B. 2000A INTEREST PYMNT	1,097.70	547.70	0	0	0
50-510-6127	WATER REV BOND SERIES 2002 INT	9,875.00	8,667.43	7,824	8,000	7,000
50-510-6128	WATER BOND SERIES 2002 PRINCLE	.00	.00	42,000	42,000	43,000
50-510-6130	C.I.B 2009 REVENUE BOND	.00	.00	14,000	14,000	14,000
50-510-6131	C.I.B 2009B REVENUE BOND	.00	.00	26,000	26,000	26,000
50-510-6132	C.I.B 2012 REVENUE BOND	.00	.00	174,000	174,000	174,000
50-510-6134	C.I.B 2014 REVENUE BOND	.00	.00	16,000	16,000	16,000
50-510-6136	C.I.B 2016 REVENUE BOND	.00	.00	9,000	9,000	9,000
	TOTAL DEBT SERVICE	16,809.07	14,996.13	310,456	311,750	311,750
	TOTAL WATER EXPENDITURES	2,870,721.17	2,875,884.25	2,465,872	2,935,950	2,765,050
	NET REV OVER EXP - WATER	136,035.06	65,778.90	(207,471)	325,970-	155,070-

VERNAL CITY CORPORATION
PROPOSED BUDGET
MAY 31, 2020
VERNAL CITY UTILITIES FUND

		FY-2018	FY-2019	YTD ACTUAL	BUD-2020	BUD-2021
	SEWER REVENUE					
	SEWER - OPERATING:					
50-373-3731	SEWER CHARGES - RESIDENTAL	1,294,715.21	1,314,986.84	1,110,729	1,300,000	1,300,000
50-373-3732	SEWER CHARGES - COMMERCIAL	535,590.79	536,859.62	431,634	535,000	535,000
	TOTAL SEWER - OPERATING	1,830,306.00	1,851,846.46	1,542,363	1,835,000	1,835,000
	SEWER - NON-OPERATING:					
50-374-3741	INTEREST EARNINGS	.00	.00	6,461	6,500	6,500
50-374-3742	AQUATECH SERVICE FEES	.00	.00	0	0	12,000
50-374-3745	IMPACT FEES	12,000.00	15,000.00	13,500	12,000	0
50-374-3748	PROFIT/(LOSS) FROM AVSMB	37,401.00	76,432.00	0	0	0
50-374-3756	JOINT SEWER 2000 W PAYMNT	6,270.00	6,270.00	6,270	6,300	6,300
	TOTAL SEWER - NON-OPERATING	55,671.00	97,702.00	26,231	24,800	24,800
	TOTAL SEWER REVENUE	1,885,977.00	1,949,548.46	1,568,594	1,859,800	1,859,800
	SEWER EXPENDITURES					
	WAGES & BENEFITS:					
50-520-1103	PERM EMPLOYEES/ REG HOURS	94,859.35	97,986.00	80,497	98,000	98,000
50-520-1104	PERM EMPLOYEES/ OT HOURS	2,805.24	4,649.28	2,839	5,000	5,000
50-520-1307	VACATION	(1,506.75)	1,093.66	0	0	0
50-520-1311	LONG TERM DISABILITY	552.07	509.59	421	700	700
50-520-1313	F I C A	6,893.19	7,168.32	5,816	8,000	8,000
50-520-1314	RETIREMENT/CITY FOR EMPLOYEES	25,125.63	24,918.40	15,044	18,200	18,200
50-520-1316	MEDICAL INSURANCE	40,364.09	43,186.17	32,141	43,800	43,800
50-520-1317	WORKERS COMP.	5,441.15	7,584.33	2,666	5,000	5,000
	TOTAL WAGES & BENEFITS	174,533.97	187,095.75	139,425	178,700	178,700
	SERVICES & SUPPLIES:					
50-520-2100	BOOKS, SUBSCRIPT, MEMBERSHIPS	352.86	.00	685	700	600
50-520-2300	TRAVEL	1,279.80	1,268.85	736	900	1,500
50-520-2400	OFFICE EXP, SUPPLIES, POSTAGE	3,504.30	4,373.15	3,709	5,000	5,000
50-520-2500	EQPMT: SUPPLIES & MAINTENANCE	1,312.66	2,574.31	536	2,000	9,000
50-520-2900	FUEL	2,490.46	2,418.74	2,101	3,000	3,000
50-520-3100	PROFESSIONAL SERVICES	3,392.50	1,970.00	480	500	1,500
50-520-4514	SPECIAL SEWER SUPPLIES	15,349.99	16,632.26	18,935	18,000	20,000
50-520-4515	SEWER LINE CONTRACTED REPAIR	.00	.00	0	5,000	5,000
50-520-4517	SEWER MANAGEMENT BOARD M & O	943,956.53	958,459.03	725,975	960,000	960,000
50-520-4521	UNIFORMS	827.66	983.71	722	950	950
50-520-4710	INDIRECT SERVICES	360,000.00	360,000.00	270,000	360,000	360,000
50-520-4766	DEPRECIATION	181,311.17	223,945.11	0	0	0
	TOTAL SERVICES & SUPPLIES	1,513,777.93	1,572,625.16	1,023,879	1,356,050	1,366,550

		FY-2018	FY-2019	YTD ACTUAL	BUD-2020	BUD-2021
	CAPITAL EQUIPMENT:					
50-520-5002	SEWER MAIN LINE CAMERA	.00	.00	64,841	70,000	0
50-520-5003	ASPHALT SAW	.00	.00	0	0	9,000
	TOTAL CAPITAL EQUIPMENT	.00	.00	64,841	70,000	9,000
	CAPITAL IMPROVE/PROJECTS:					
50-520-5503	REHABILITATE SEWER LINES	.00	.00	106,670	300,000	275,000
50-520-5505	CONTRACT CLEANING SEWER LINES	71,305.65	69,714.20	2,110	70,000	70,000
	TOTAL CAPITAL IMPROVE/PROJECTS	71,305.65	69,714.20	108,780	370,000	345,000
	DEBT SERVICE:					
50-520-6012	W Q: SEWER INSP BOND PRINCIPLE	.00	.00	9,000	9,000	9,000
50-520-6122	W Q: SEWER INSP BOND INTEREST	1,458.32	1,715.01	1,330	1,500	1,500
50-520-6123	SEWER BOND CIB 2002 B	.00	.00	35,000	35,000	35,000
50-520-6126	SEWER BOND CIB 2006	.00	.00	35,000	35,000	35,000
50-520-6127	SEWER BOND 2009 PYMNT	(341.67)	(341.66)	11,000	11,000	11,000
50-520-6128	SEWER BOND 2016 PYMNT	.00	.00	22,000	22,000	22,000
	TOTAL DEBT SERVICE	1,116.65	1,373.35	113,330	113,500	113,500
	TOTAL SEWER EXPENDITURES	1,760,734.20	1,830,808.46	1,450,254	2,088,250	2,012,750
	NET REV OVER EXP - SEWER	125,242.80	118,740.00	118,339	228,450-	152,950-

VERNAL CITY CORPORATION
PROPOSED BUDGET
MAY 31, 2020
VERNAL CITY UTILITIES FUND

		FY-2018	FY-2019	YTD ACTUAL	BUD-2020	BUD-2021
	SOLID WASTE					
	OPERATING:					
50-377-3771	RESIDENTIAL CHARGES	448,608.03	417,927.03	351,141	450,000	450,000
50-377-3774	GARBAGE CAN RENT	40,013.15	41,132.05	35,314	40,000	40,000
50-377-3776	RECYCLING PROGRAM - RECYCLOP	.00	1,460.00	2,190	1,800	1,800
	TOTAL OPERATING	488,621.18	460,519.08	388,645	491,800	491,800
	TOTAL SOLID WASTE REVENUE	488,621.18	460,519.08	388,645	491,800	491,800
	SOLID WASTE EXPENDITURES					
	SERVICES & SUPPLIES:					
50-570-2200	PUBLIC NOTICES	92.25	.00	0	100	100
50-570-2400	OFFICE EXP, SUPPLIES, POSTAGE	4,021.56	3,804.71	3,709	4,500	4,500
50-570-3100	PROFESSIONAL SERVICES	414,870.70	384,207.93	291,099	435,000	435,000
50-570-4531	RECYCLING PROGRAM EXPENSE	6,000.00	6,000.00	4,500	6,000	6,000
50-570-4535	RECYCLOPS EXPENSE	.00	1,293.21	1,658	2,000	2,000
50-570-4710	INDIRECT SERVICE	36,000.00	36,000.00	27,000	36,000	36,000
	TOTAL SERVICES & SUPPLIES	460,984.51	431,305.85	327,965	483,600	483,600
	TOTAL SOLID WASTE EXPENDITURES	460,984.51	431,305.85	327,965	483,600	483,600
	NET REV OVER EXP - SOLID WASTE	27,636.67	29,213.23	60,680	8,200	8,200
	UTILITY FUND EXCESS REV/EXP	288,914.53	213,732.13	(28,452)	546,220-	299,820-

Account Number	Account Title	2018 Prior Year 2 Actual	2019 Prior Year Actual	2020 Current Year Actual	2020 Current Year Budget	2021 Future Year Budget
M B A GENERAL FUND						
MUNICIPAL BUILDING REVENUE						
11-31-15	LEASE REVENUE INCOME	226,025.00	.00	226,425.00	227,000.00	227,000.00
11-31-17	SALES TAX INCOME	361,255.22	291,454.36	197,937.50	265,000.00	265,000.00
11-31-32	PROCEEDS FROM BONDS	3,575,000.00	.00	.00	.00	.00
11-31-33	PROCEEDS FROM PREMIUM	354,141.65	.00	.00	.00	.00
11-31-46	INTEREST EARNINGS	16,436.84	29,288.21	19,333.06	4,000.00	4,000.00
11-31-49	IRS 8038-CP INTEREST REBATE	18,443.11	17,987.67	17,539.43	19,000.00	19,000.00
11-31-53	CONTRIBUTION: ANIMAL SSD	10,000.00	10,000.00	30,000.00	10,000.00	.00
11-31-54	CONTRIBUTION: UINTAH FIRE SSD	10,000.00	10,000.00	10,000.00	10,000.00	10,000.00
	Total MUNICIPAL BUILDING REVENUE:	4,571,301.82	358,730.24	501,234.99	535,000.00	525,000.00
NON-DEPARTMENTAL MBA						
11-41-23	BANK CHARGES	20.00	20.00	20.00	.00	.00
11-41-24	OFFICE EXPENSE, SUPPLIES & POS	10.00	10.00	.00	.00	.00
11-41-41	INSURANCE PREMIUMS	17,189.69	2,964.32	15,948.80	18,000.00	16,000.00
11-41-66	DEPRECIATION EXPENSE	.00	.00	.00	.00	.00
11-41-72	NEW MUNICIPAL COMPLEX	.00	.00	.00	.00	.00
	Total NON-DEPARTMENTAL MBA:	17,219.69	2,994.32	15,968.80	18,000.00	16,000.00
DEBT SERVICE MBA						
11-42-71	2017 MARKET BONDS - PRINCIPLE	.00	135,000.00	140,000.00	140,000.00	145,000.00
11-42-72	2017 MARKET BONDS - INTEREST	27,816.25	128,700.00	125,950.00	128,000.00	125,000.00
11-42-74	2017 MARKET BONDS - EXPENSE	73,307.34	750.00	750.00	.00	2,000.00
11-42-85	CIB ANIMAL SHELTER BOND PRINC.	10,000.00	10,000.00	30,000.00	10,000.00	.00
11-42-86	CIB BOND: FIRE TRUCK	10,000.00	10,000.00	10,000.00	10,000.00	10,000.00
11-42-90	CIB BOND PRIN: 2009 A	107,000.00	.00	107,000.00	107,000.00	107,000.00
11-42-91	CIB BOND PRIN: 2009 B	64,000.00	.00	66,000.00	64,000.00	68,000.00
11-42-92	CIB BOND INTEREST: 2009 B	55,025.00	.00	53,425.00	56,000.00	52,000.00
11-42-93	PUBLIC BOND 2009 - PRINC	3,765,217.64	.00	.00	.00	.00
11-42-94	PUBLIC BOND 2009 - Interest	81,026.25	.00	.00	.00	.00
11-42-95	2009 WELLS TRUST FEES	1,500.00	.00	.00	2,000.00	.00
	Total DEBT SERVICE MBA:	4,194,892.48	284,450.00	533,125.00	517,000.00	509,000.00
INTER/INTRA GOVERNMENT						
11-90-10	CONTRIBUTIONS TO OTHER FUNDS	203,444.86	.00	.00	.00	.00
	Total INTER/INTRA GOVERNMENT:	203,444.86	.00	.00	.00	.00
	Net Total M B A GENERAL FUND:	155,744.79	71,285.92	47,858.81-	.00	.00
	Net Grand Totals:	155,744.79	71,285.92	47,858.81-	.00	.00

VERNAL PLANNING COMMISSION
STAFF REPORT

ITEM: B1 DATE: 8 May 2020

MINOR SUBDIVISION		RECOMMENDATION	
APPLICATION:	2019-009-SUB (Tyler & Marilee Shiner Minor Subdivision)		
APPLICANT:	Tyler Shiner		
LOCATION:	261 West 500 South		
PARCEL NUMBER(S):	05:054:0003	ZONE:	RA-1
		ACREAGE:	5.0 Acres

NARRATIVE AND ANALYSIS:

The applicant is requesting approval of a minor subdivision of one parcel into two lots. The areas of the new proposed lots will be Lot 1 at .8 acres and Lot 2 at .4.2 acres. Each of the new lots meet dimensional and area standards set forth in Vernal City Code and will not create a nonconforming condition with any of the existing structures. Lot 2 is a flag lot and approval of this subdivision constitutes approval of this flag lot by the Planning Commission per Vernal City Code. Staff has conducted a full review and found that, with some minor corrections, the submittal is in substantial compliance with Vernal City requirements. A review of the application has been conducted by Timberline Land Surveying and some minor discrepancies were noted. Corrections are being made as of the date of this staff report and the submittal will be in substantial compliance with applicable surveying and engineering standards as well as Vernal City Code.

STAFF DETERMINATION:

This application is in substantial compliance with Vernal City Code and the requirements contained therein. Staff finds that this is an approvable application with the following conditions:

1. Any and all corrections required by staff and/or engineering are made and submitted in the form of corrected drawings.

Allen Parker
Assistant City Manager

TYLER & MARILEE SHINER

RECORD OF SURVEY FOR MINOR SUBDIVISION

Located in the NW 1/4 NW 1/4 of Section 26, T4S, R21E, S.L.B.&M.
Uintah County, Utah

LEGEND

- = SECTION CORNERS FOUND
- = PROPERTY CORNERS SET (Plastic Cap on 5/8" Rebar)
- = PROPERTY CORNERS FOUND
- = FENCE
- = SEWER MANHOLE
- = WATER VALVE
- = FIRE HYDRANT
- = UTILITY POLE
- = OVERHEAD POWER
- = STORM DRAIN
- = RISER

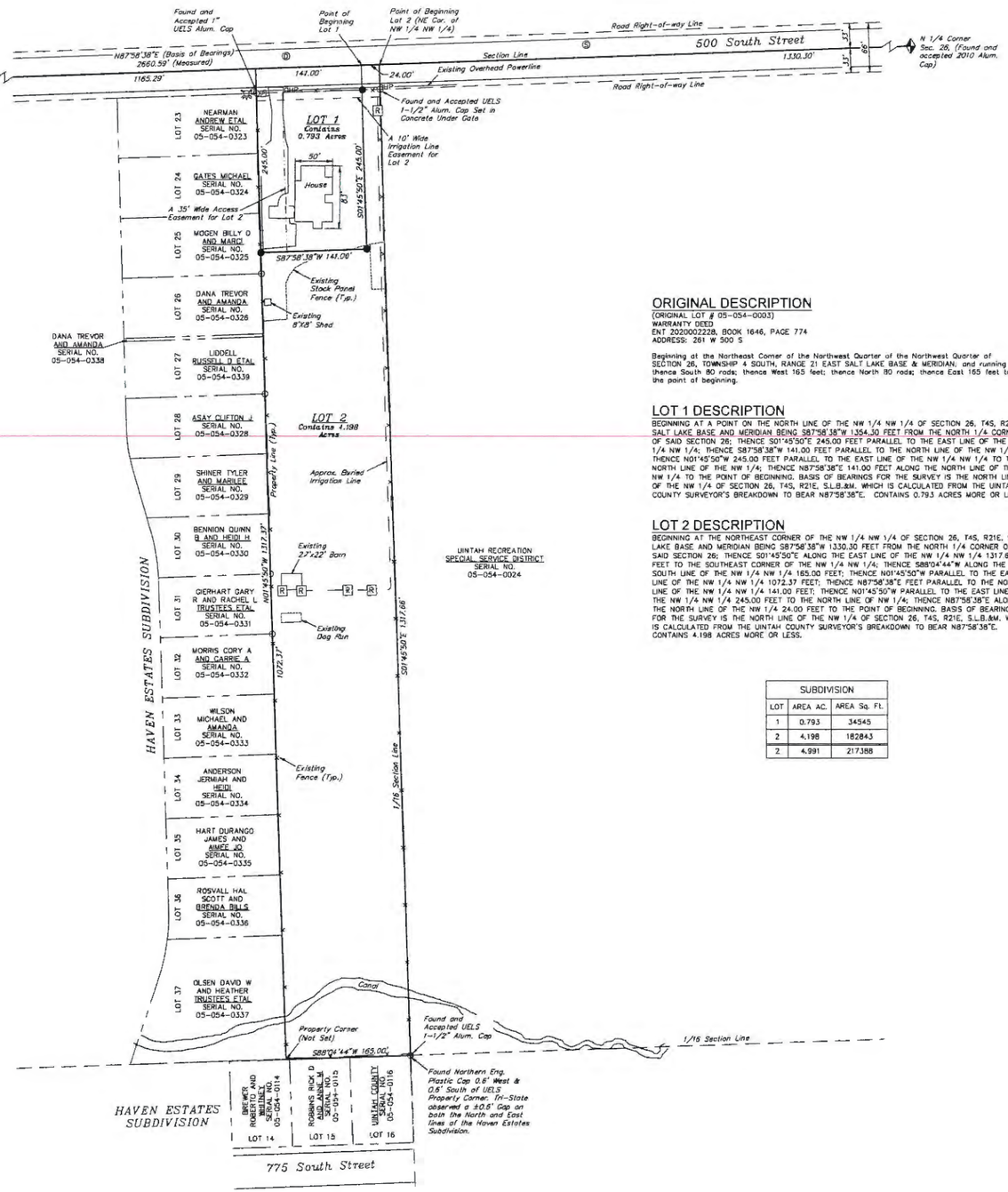

ORIGINAL DESCRIPTION

(ORIGINAL LOT # 05-054-0003)
WARRANTY DEED
ENT 20200002228, BOOK 1646, PAGE 774
ADDRESS: 261 W 500 S

Beginning at the Northeast Corner of the Northwest Quarter of the Northwest Quarter of SECTION 26, TOWNSHIP 4 SOUTH, RANGE 21 EAST SALT LAKE BASE & MERIDIAN; and running thence South 80 rods; thence West 165 feet; thence North 80 rods; thence East 165 feet to the point of beginning.

LOT 1 DESCRIPTION

BEGINNING AT A POINT ON THE NORTH LINE OF THE NW 1/4 NW 1/4 OF SECTION 26, T4S, R21E, SALT LAKE BASE AND MERIDIAN BEING S87°58'38"W 1,354.30 FEET FROM THE NORTH 1/4 CORNER OF SAID SECTION 26; THENCE S01°45'50"E 245.00 FEET PARALLEL TO THE EAST LINE OF THE NW 1/4 NW 1/4; THENCE S87°58'38"W 141.00 FEET PARALLEL TO THE NORTH LINE OF THE NW 1/4; THENCE N01°45'50"W 245.00 FEET PARALLEL TO THE EAST LINE OF THE NW 1/4 NW 1/4 TO THE NORTH LINE OF THE NW 1/4; THENCE N87°58'38"E 141.00 FEET ALONG THE NORTH LINE OF THE NW 1/4 TO THE POINT OF BEGINNING. BASIS OF BEARINGS FOR THE SURVEY IS THE NORTH LINE OF THE NW 1/4 OF SECTION 26, T4S, R21E, S.L.B.&M. WHICH IS CALCULATED FROM THE UINTAH COUNTY SURVEYOR'S BREAKDOWN TO BEAR N87°58'38"E. CONTAINS 0.793 ACRES MORE OR LESS.

LOT 2 DESCRIPTION

BEGINNING AT THE NORTHEAST CORNER OF THE NW 1/4 NW 1/4 OF SECTION 26, T4S, R21E, SALT LAKE BASE AND MERIDIAN BEING S87°58'38"W 1330.30 FEET FROM THE NORTH 1/4 CORNER OF SAID SECTION 26; THENCE S01°45'50"E ALONG THE EAST LINE OF THE NW 1/4 NW 1/4 1317.86 FEET TO THE SOUTHEAST CORNER OF THE NW 1/4 NW 1/4; THENCE S88°04'44"W ALONG THE SOUTH LINE OF THE NW 1/4 NW 1/4 165.00 FEET; THENCE N01°45'50"W PARALLEL TO THE EAST LINE OF THE NW 1/4 NW 1/4 1072.37 FEET; THENCE N87°58'38"E PARALLEL TO THE NORTH LINE OF THE NW 1/4 NW 1/4 141.00 FEET; THENCE N01°45'50"W PARALLEL TO THE EAST LINE OF THE NW 1/4 NW 1/4 245.00 FEET TO THE NORTH LINE OF NW 1/4; THENCE N87°58'38"E ALONG THE NORTH LINE OF THE NW 1/4 24.00 FEET TO THE POINT OF BEGINNING. BASIS OF BEARINGS FOR THE SURVEY IS THE NORTH LINE OF THE NW 1/4 OF SECTION 26, T4S, R21E, S.L.B.&M. WHICH IS CALCULATED FROM THE UINTAH COUNTY SURVEYOR'S BREAKDOWN TO BEAR N87°58'38"E. CONTAINS 4.198 ACRES MORE OR LESS.

SUBDIVISION		
LOT	AREA AC.	AREA Sq. Ft.
1	0.793	34545
2	4.198	182843
2.	4.991	217388

Section 26, T4S, R21E, S.L.B.&M.

Scale: 1" = 1000'

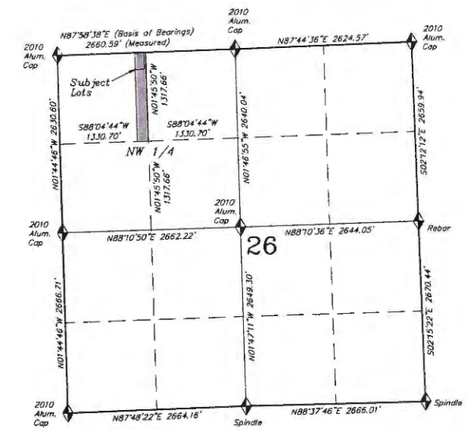

CITY COUNCIL'S CERTIFICATE OF ACCEPTANCE AND APPROVAL

I HEREBY ACCEPT AND APPROVE THIS PLAT,

THIS _____ DAY OF _____ 20____

_____

(PLACE SA OVER SIGNATURE BLOCK)

ATTESTED BY CITY RECORDER:

PLANNING COMMISSION'S CERTIFICATE OF APPROVAL

I HEREBY APPROVE THIS PLAT,

THIS _____ DAY OF _____ 20___

_____

ATTEST:

VERNAL CITY WATER & SEWER'S CERTIFICATE OF ACCEPTANCE & APPROVAL

I HEREBY ACCEPT AND APPROVE THIS PLAT,

THIS _____ DAY OF _____ 20____

_____

HEALTH DEPARTMENT'S CERTIFICATE OF APPROVAL

I HEREBY APPROVE THIS PLAT,

THIS _____ DAY OF _____ 20____

_____

CITY ENGINEER'S CERTIFICATE OF APPROVAL

I HEREBY APPROVE THIS PLAT,

THIS _____ DAY OF _____ 20___

LICENSE NO. _____ STATE _____

_____

(PLACE SEAL OVER SIGNATURE BLOCK)

CITY SURVEYOR'S CERTIFICATE OF APPROVAL

I HEREBY APPROVE THIS PLAT,

THIS _____ DAY OF _____ 20___

LICENSE NO. _____ STATE _____

_____

(PLACE SEAL OVER SIGNATURE BLOCK)

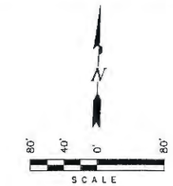

OWNER'S DEDICATION AND CONSENT TO RECORD

KNOWN ALL MEN BY THESE PRESENTS THAT THE UNDERSIGNED ARE THE OWNERS OF THE ABOVE DESCRIBED TRACT OF LAND, AND HEREBY CAUSE THE SAME TO BE DIVIDED INTO LOTS, TOGETHER WITH EASEMENTS AS SET FORTH TO BE HEREAFTER KNOWN AS

TYLER & MARILEE SHINER MINOR SUBDIVISION

AND DO HEREBY DEDICATE FOR THE PERPETUAL USE OF THE PUBLIC ALL ROADS AND OTHER AREAS SHOWN ON THIS PLAT AS AS INTENDED FOR PUBLIC USE.

AND THAT WE HAVE LEGAL AUTHORITY TO SUBDIVIDE THE DESCRIBED PROPERTY. WE FURTHER CERTIFY THAT THE DESCRIBED LOTS WILL ABUT A DEDICATED STREET, THAT THE LOTS MEET THE SIZE AND AREA REQUIREMENTS OF THE ZONE IN WHICH THEY ARE LOCATED AND THAT WE DESIRE TO SUBDIVIDE THE PROPERTY AND CREATE NEW LOTS AS SHOWN HEREON.

THE UNDERSIGNED OWNERS ALSO HEREBY CONVEY TO ANY AND ALL PUBLIC UTILITY COMPANIES A PERPETUAL, NON-EXCLUSIVE EASEMENT OVER THE PUBLIC UTILITY EASEMENTS SHOWN ON THIS PLAT, THE SAME TO BE USED FOR THE INSTALLATION, MAINTENANCE AND OPERATION OF UTILITY LINES AND FACILITIES. THE UNDERSIGNED OWNERS ALSO HEREBY CONVEY ANY OTHER EASEMENTS AS SHOWN ON THIS PLAT TO THE PARTIES INDICATED AND FOR THE PURPOSES SHOWN HEREON.

_____
TYLER SHINER — DATE
595 S 300 W VERNAL, UTAH

_____
MARILEE SHINER — DATE
595 S 300 W VERNAL, UTAH

ACKNOWLEDGMENT

ON THIS _____ DAY OF _____, IN THE YEAR 20____

BEFORE ME, _____, A NOTARY PUBLIC,

PERSONALLY APPEARED _____, ALSO,

_____, PROVED ON THE BASIS OF SATISFACTORY EVIDENCE TO BE THE PERSON(S) WHOSE NAME(S) SUBSCRIBED TO THIS INSTRUMENT, AND ACKNOWLEDGED (HE/SHE/THEY) EXECUTED THE SAME. WITNESS MY HAND AND OFFICIAL SEAL.

_____
NOTARY PUBLIC

SEAL

UINTAH COUNTY TREASURER'S APPROVAL

I CERTIFY AT THE TIME OF MY SIGNING THIS PLAT, THE PROPERTIES AS SHOWN HEREON HAVE BEEN CLEARED OF ALL BACK TAXES.

_____
UINTAH COUNTY TREASURER — DATE

SURVEYORS NARRATIVE

WE WERE ASKED BY TYLER & MARILEE SHINER TO PERFORM A SURVEY OF THEIR PROPERTY TO ASSIST IN SUBDIVIDING IT INTO TWO LOTS.

AS CONTROL FOR THE SURVEY WE USED THE UINTAH COUNTY'S SURVEYOR'S BREAKDOWN AND THE SECTION CORNERS SHOWN HEREON. TRIMBLE GPS EQUIPMENT WAS USED IN PERFORMANCE OF THE SURVEY.

FOR REFERENCE MATERIAL WE USED MARCELLA MEADOWS SUBDIVISION, DEEDS OF RECORD AND THE SECTION CORNERS SHOWN HEREON. WE ALSO REFERENCED THE HAVEN ESTATES SUBDIVISION & SURVEY FILE NO. 2323 AS FILED FOR RECORD IN THE UINTAH COUNTY RECORDERS OFFICE.

BASIS OF BEARINGS FOR THE SURVEY IS THE NORTH LINE OF THE NW 1/4 OF SECTION 26, T4S, R21E, S.L.B.&M. WHICH IS CALCULATED FROM THE UINTAH COUNTY SURVEYOR'S BREAKDOWN TO BEAR N87°58'38"E.

CERTIFICATE OF SURVEYING

I, STACY STEWART, DO HEREBY CERTIFY THAT I AM A PROFESSIONAL LAND SURVEYOR, AND THAT I HOLD LICENSE NO. 189377 AS PRESCRIBED UNDER THE LAWS OF THE STATE OF UTAH. I FURTHER CERTIFY THAT BY AUTHORITY OF THE OWNERS, I HAVE MADE A SURVEY OF THE TRACT OF LAND SHOWN ON THIS PLAT AND DESCRIBED HEREON, AND HAVE SUBDIVIDED SAID TRACT OF LAND INTO LOTS, HEREAFTER TO BE KNOWN AS THE TYLER & MARILEE SHINER MINOR SUBDIVISION AND THAT THE SAME HAS BEEN CORRECTLY SURVEYED AND MONUMENTED ON THE GROUND AS SHOWN ON THIS PLAT.

45363

REGISTERED PROFESSIONAL LAND SURVEYOR No.189377 04-27-2020 STACY W. STEWART STATE OF UTAH

STACY W. STEWART
PLS No. 189377
STATE OF UTAH

SURVEYED BY: C.S., S.H.	Tri State Land Surveying, Inc.
DATE SURVEYED: 04-20-20	P: (435) 781-2501
DRAWN BY: D.COX	F: (435) 781-2518
DATE: 04-21-20	180 NORTH VERNAL AVE. VERNAL, UTAH 84078
SCALE: 1" = 80'	
DWG # 20-0026	

2020-003-SMB

FILE: Y:\Drawings\1 PROPERTY SURVEYS\SHINER, TYLER MINOR SEC 26 T4S-R21E\26-4-1.dwg

U.S. Department
of Transportation
**Federal Aviation
Administration**

Northwest Mountain Region
Colorado · Idaho · Montana · Oregon ·
Utah Washington · Wyoming

Denver Airports District Office
26805 E. 68th Ave., Suite 224
Denver, CO 80249

The Honorable Doug Hammond
Mayor of Vernal
374 East Main Street
Vernal, Utah 84078

Mr. Brad Horrocks, Commission Chairman
Uintah County Commissioners
152 E 100 N, 2nd Floor West Wing
Vernal, Utah 84078

Dear Mayor Hammond and Commissioner Horrocks:

Please find the following electronic CARES Act Grant Offer, Grant No. 3-49-0037-039-2020 for Vernal Regional Airport. This letter outlines expectations for success. Please read and follow the instructions carefully.

To properly enter into this agreement, you must do the following:

a. The governing body must provide authority to execute the grant to the individual signing the grant; i.e. the sponsor's authorized representative.

b. The sponsor's authorized representative must execute the grant, followed by the attorney's certification, **no later than May 29, 2020,** in order for the grant to be valid.

c. You may not make any modification to the text, terms or conditions of the grant offer.

d. The grant offer must be digitally signed by the sponsor's legal signatory authority and then the grant offer will be routed via email to the sponsor's attorney. Once the attorney has digitally attested to the grant, an email with the executed grant will be sent to all parties.

Subject to the requirements in 2 CFR §200.305, each payment request for reimbursement under this grant must be made electronically via the Delphi eInvoicing System. Please see the attached Grant Agreement for more information regarding the use of this System. The terms and conditions of this agreement require you drawdown and expend these funds within four years.

An airport sponsor may use these funds for any purpose for which airport revenues may be lawfully used. CARES grant recipients should follow the FAA's Policy and Procedures Concerning the Use of Airport Revenues ("Revenue Use Policy"), 64 Federal Register 7696 (64

FR 7696), as amended by 78 Federal Register 55330 (78 FR 55330). The Revenue Use Policy defines permitted uses of airport revenue. In addition to the detailed guidance in the Revenue Use Policy, the CARES Act states the funds may not be used for any purpose not related to the airport.

With each payment request you are required to upload directly to Delphi:

- An invoice summary, even if you only paid a single invoice and
- The documentation in support of each invoice covered in the payment request.

For the final payment request, in addition to the requirement listed above for all payment requests, you are required to upload directly to Delphi:

- A final financial report summarizing all of the costs incurred and reimbursed, and
- An SF-425, and
- A narrative report.

The narrative report will summarize the expenses covered by the CARES Act funds and state that all expenses were in accordance with the FAA's Policy and Procedures Concerning the Use of Airport Revenues and incurred after January 20, 2020.

As a condition of receiving Federal assistance under this award, you must comply with audit requirements as established under 2 CFR part 200. Subpart F requires non-Federal entities that expend $750,000 or more in Federal awards to conduct a single or program specific audit for that year. Note that this includes Federal expenditures made under other Federal-assistance programs. Please take appropriate and necessary action to assure your organization will comply with applicable audit requirements and standards.

Once you have drawn down all funds and uploaded the required documents to Delphi, notify Jesse Lyman by email (jesse.a.lyman@faa.gov) that the grant is administratively and financially closed. We are readily available to assist you and your designated representative with the requirements stated herein. If you have additional questions, please contact Jesse at (303) 342-1262. We sincerely value your cooperation in these efforts.

Sincerely,

John P. Bauer, Manager
Denver Airports District Office

U.S. Department
of Transportation
Federal Aviation
Administration

CARES ACT AIRPORT GRANT AGREEMENT

PART I – OFFER

Federal Award Offer Date	
Airport/Planning Area	Vernal Regional Airport
CARES Grant Number	3-49-0037-039-2020 [Contract No. DOT-FA20NM-K1030]
Unique Entity Identifier	05-053-4361

TO: City of Vernal and County of Uintah, Utah
(herein called the "Sponsor") (For Co-Sponsors, list all Co-Sponsor names. The word "Sponsor" in this Grant Agreement also applies to a Co-Sponsor.)

FROM: **The United States of America** (acting through the Federal Aviation Administration, herein called the "FAA")

WHEREAS, the Sponsor has submitted to the FAA a Coronavirus Aid, Relief, and Economic Security Act (CARES Act or "the Act") Airports Grants Application (herein called the "Grant") dated April 22, 2020, for a grant of Federal funds at or associated with the Vernal Regional Airport, which is included as part of this Grant Agreement; and

WHEREA5, the Sponsor has accepted the terms of FAA's Grant offer;

WHEREAS, in consideration of the promises, representations and assurances provided by the Sponsor, the FAA has approved the Grant Application for the Vernal Regional Airport (herein called the "Grant") consisting of the following:

This Grant is provided in accordance with the CARES Act, as described below, to provide eligible Sponsors with funding to help offset a decline in revenues arising from diminished airport operations and activities as a result of the COVID-19 Public Health Emergency. CARES Act Airport Grants amounts to specific airports are derived by legislative formula.

The purpose of this Grant is to maintain safe and efficient airport operations. Funds provided under this Grant Agreement must only be used for purposes directly related to the airport. Such purposes can include the reimbursement of an airport's operational and maintenance expenses or debt service payments. CARES Act Airport Grants may be used to reimburse airport operational and maintenance expenses directly related to Vernal Regional Airport incurred no earlier than January 20, 2020. CARES Act Airport Grants also may be used to reimburse a Sponsor's payment of debt service where such payments occur on or after April 14, 2020. Funds provided under the Grant will be governed by the same principles that govern "airport revenue." New airport development projects may not be funded

with this Grant, unless and until the Grant Agreement is amended or superseded by a subsequent agreement that addresses and authorizes the use of funds for the airport development project.

NOW THEREFORE, in accordance with the applicable provisions of the CARES Act, Public Law Number 116-136, the representations contained in the Grant Application, and in consideration of, (a) the Sponsor's acceptance of this Offer; and, (b) the benefits to accrue to the United States and the public from the accomplishment of the Grant and in compliance with the conditions as herein provided,

THE FEDERAL AVIATION ADMINISTRATION, FOR AND ON BEHALF OF THE UNITED STATES, HEREBY OFFERS AND AGREES to pay 100% percent of the allowable costs incurred as a result of and in accordance with this Grant Agreement.

Assistance Listings Number (Formerly CFDA Number): 20.106

This Offer is made on and **SUBJECT TO THE FOLLOWING TERMS AND CONDITIONS:**

CONDITIONS

1. **Maximum Obligation.** The maximum obligation of the United States payable under this Offer is $1,043,853.

2. **Period of Performance.** The period of performance shall commence on the date the Sponsor formally accepts this agreement. The end date of the period of performance is 4 years (1,460 calendar days) from the date of acceptance.

   The Sponsor may only charge allowable costs for obligations incurred prior to the end date of the period of performance (2 CFR § 200.309). Unless the FAA authorizes a written extension, the Sponsor must submit all Grant closeout documentation and liquidate (pay-off) all obligations incurred under this award no later than 90 calendar days after the end date of the period of performance (2 CFR § 200.343).

   The period of performance end date shall not affect, relieve or reduce Sponsor obligations and assurances that extend beyond the closeout of this Grant Agreement.

3. **Unallowable Costs.** The Sponsor shall not seek reimbursement for any costs that the FAA has determined to be unallowable under the CARES Act.

4. **Indirect Costs - Sponsor.** The Sponsor may charge indirect costs under this award by applying the indirect cost rate identified in the Grant Application as accepted by the FAA, to allowable costs for Sponsor direct salaries and wages only.

5. **Final Federal Share of Costs.** The United States' share of allowable Grant costs is 100%.

6. **Completing the Grant without Delay and in Conformance with Requirements.** The Sponsor must carry out and complete the Grant without undue delays and in accordance with this Grant Agreement, the CARES Act, and the regulations, policies, standards and procedures of the Secretary of Transportation ("Secretary"). Pursuant to 2 CFR § 200.308, the Sponsor agrees to report to the FAA any disengagement from funding eligible expenses under the Grant that exceeds three months and request prior approval from FAA. The report must include a reason for the stoppage. The Sponsor agrees to comply with the attached assurances, which are part of this agreement and any addendum that may be attached hereto at a later date by mutual consent.

7. **Amendments or Withdrawals before Grant Acceptance.** The FAA reserves the right to amend or withdraw this offer at any time prior to its acceptance by the Sponsor.

8. **Offer Expiration Date.** This offer will expire and the United States will not be obligated to pay any part of the costs unless this offer has been accepted by the Sponsor on or before May 29, 2020, or such subsequent date as may be prescribed in writing by the FAA.

9. **Improper Use of Federal Funds.** The Sponsor must take all steps, including litigation if necessary, to recover Federal funds spent fraudulently, wastefully, or in violation of Federal antitrust statutes, or misused in any other manner, including uses that violate this Grant Agreement, the CARES Act or other provision of applicable law. For the purposes of this Grant Agreement, the term "Federal funds" means funds however used or dispersed by the Sponsor, that were originally paid pursuant to this or any other Federal grant agreement(s). The Sponsor must return the recovered Federal share, including funds recovered by settlement, order, or judgment, to the Secretary. The Sponsor must furnish to the Secretary, upon request, all documents and records pertaining to the determination of the amount of the Federal share or to any settlement, litigation, negotiation, or other efforts taken to recover such funds. All settlements or other final positions of the Sponsor, in court or otherwise, involving the recovery of such Federal share require advance approval by the Secretary.

10. **United States Not Liable for Damage or Injury.** The United States is not responsible or liable for damage to property or injury to persons which may arise from, or relate to this Grant Agreement, including, but not limited to, any action taken by a Sponsor related to or arising from, directly or indirectly, this Grant Agreement.

11. **System for Award Management (SAM) Registration And Universal Identifier** Unless the Sponsor is exempted from this requirement under 2 CFR § 25.110, the Sponsor must maintain the currency of its information in the SAM until the Sponsor submits the final financial report required under this Grant, or receives the final payment, whichever is later. This requires that the Sponsor review and update the information at least annually after the initial registration and more frequently if required by changes in information or another award term. Additional information about registration procedures may be found at the SAM website (currently at http://www.sam.gov).

12. **Electronic Grant Payment(s).** Unless otherwise directed by the FAA, the Sponsor must make each payment request under this agreement electronically via the Delphi eInvoicing System for Department of Transportation (DOT) Financial Assistance Awardees.

13. **Financial Reporting and Payment Requirements.** The Sponsor will comply with all Federal financial reporting requirements and payment requirements, including submittal of timely and accurate reports.

14. **Buy American.** Unless otherwise approved in advance by the FAA, the Sponsor will not acquire or permit any contractor or subcontractor to acquire any steel or manufactured products produced outside the United States to be used for any expense which funds are provided under this Grant. The Sponsor will include a provision implementing applicable Buy American statutory and regulatory requirements in all contracts related to this Grant Agreement.

15. **Audits for Public Sponsors.** The Sponsor must provide for a Single Audit or program-specific audit in accordance with 2 CFR Part 200. The Sponsor must submit the audit reporting package to the Federal Audit Clearinghouse on the Federal Audit Clearinghouse's Internet Data Entry System at http://harvester.census.gov/facweb/. Upon request of the FAA, the Sponsor shall provide one copy of the completed audit to the FAA.

16. **Suspension or Debarment.** When entering into a "covered transaction" as defined by 2 CFR § 180.200, the Sponsor must:

    A. Verify the non-federal entity is eligible to participate in this Federal program by:

        1. Checking the excluded parties list system (EPLS) as maintained within the System for Award

Management (SAM) to determine if the non-federal entity is excluded or disqualified; or

2. Collecting a certification statement from the non-federal entity attesting the entity is not excluded or disqualified from participating; or
3. Adding a clause or condition to covered transactions attesting the individual or firm is not excluded or disqualified from participating.

B. Require prime contractors to comply with 2 CFR § 180.330 when entering into lower-tier transactions (e.g. sub-contracts).

C. Immediately disclose to the FAA whenever the Sponsor (1) learns the Sponsor has entered into a covered transaction with an ineligible entity, or (2) suspends or debars a contractor, person, or entity.

17. <u>Ban on Texting While Driving</u>.

A. In accordance with Executive Order 13513, Federal Leadership on Reducing Text Messaging While Driving, October 1, 2009, and DOT Order 3902.10, Text Messaging While Driving, December 30, 2009, the Sponsor is encouraged to:

1. Adopt and enforce workplace safety policies to decrease crashes caused by distracted drivers including policies to ban text messaging while driving when performing any work for, or on behalf of, the Federal government, including work relating to this Grant or subgrant.
2. Conduct workplace safety initiatives in a manner commensurate with the size of the business, such as:
   a. Establishment of new rules and programs or re-evaluation of existing programs to prohibit text messaging while driving; and
   b. Education, awareness, and other outreach to employees about the safety risks associated with texting while driving.

B. The Sponsor must insert the substance of this clause on banning texting while driving in all subgrants, contracts and subcontracts.

18. <u>Employee Protection from Reprisal</u>.

A. Prohibition of Reprisals –

1. In accordance with 41 U.S.C. § 4712, an employee of a grantee or subgrantee may not be discharged, demoted, or otherwise discriminated against as a reprisal for disclosing to a person or body described in sub-paragraph (A)(2), information that the employee reasonably believes is evidence of:
   a. Gross mismanagement of a Federal grant;
   b. Gross waste of Federal funds;
   c. An abuse of authority relating to implementation or use of Federal funds;
   d. A substantial and specific danger to public health or safety; or
   e. A violation of law, rule, or regulation related to a Federal grant.
2. Persons and bodies covered: The persons and bodies to which a disclosure by an employee is covered are as follows:
   a. A member of Congress or a representative of a committee of Congress;

b. An Inspector General;

c. The Government Accountability Office;

d. A Federal office or employee responsible for oversight of a grant program;

e. A court or grand jury;

f. A management office of the grantee or subgrantee; or

g. A Federal or State regulatory enforcement agency.

3. Submission of Complaint – A person who believes that they have been subjected to a reprisal prohibited by paragraph A of this grant term may submit a complaint regarding the reprisal to the Office of Inspector General (OIG) for the U.S. Department of Transportation.

4. Time Limitation for Submittal of a Complaint - A complaint may not be brought under this subsection more than three years after the date on which the alleged reprisal took place.

5. Required Actions of the Inspector General – Actions, limitations, and exceptions of the Inspector General's office are established under 41 U.S.C. § 4712(b).

6. Assumption of Rights to Civil Remedy - Upon receipt of an explanation of a decision not to conduct or continue an investigation by the Office of Inspector General, the person submitting a complaint assumes the right to a civil remedy under 41 U.S.C. § 4712(c).

19. **Co-Sponsor.** Co-Sponsors understand and agree that they jointly and severally adopt and ratify the representations and assurances contained herein and that the word "Sponsor" as used in the application and other assurances is deemed to include all co-sponsors.

20. **Limitations.** Nothing provided herein shall be construed to limit, cancel, annul, or modify the terms of any Federal grant agreement(s), including all terms and assurances related thereto, that have been entered into by the Sponsor and the FAA prior to the date of this Grant Agreement.

SPECIAL CONDITIONS

1. **ARFF and SRE Equipment and Vehicles.** The Sponsor agrees that it will:

A. House and maintain the equipment in a state of operational readiness on and for the airport;

B. Provide the necessary staffing and training to maintain and operate the vehicle and equipment;

C. Restrict the vehicle to on-airport use only;

D. Restrict the vehicle to the use for which it was intended; and

E. Amend the Airport Emergency Plan and/or Snow and Ice Control Plan to reflect the acquisition of a vehicle and equipment.

2. **Equipment or Vehicle Replacement.** The Sponsor agrees that it will treat the proceeds from the trade-in or sale of equipment being replaced with these funds as airport revenue.

3. **Off-Airport Storage of ARFF Vehicle.** The Sponsor agrees that it will:

A. House and maintain the vehicle in a state of operational readiness for the airport;

B. Provide the necessary staffing and training to maintain and operate the vehicle;

C. Restrict the vehicle to airport use only;

D. Amend the Airport Emergency Plan to reflect the acquisition of the vehicle;

E. Within 60 days, execute an agreement with local government including the above provisions and a provision that violation of said agreement could require repayment of Grant funding; and

F. Submit a copy of the executed agreement to the FAA.

4. **Equipment Acquisition.** The Sponsor agrees that it will maintain Sponsor-owned and -operated equipment and use for purposes directly related to the airport.

5. **Utilities Proration.** For purposes of computing the United States' share of the allowable airport operations and maintenance costs, the allowable cost of utilities incurred by the Sponsor to operate and maintain airport(s) included in the Grant must not exceed the percent attributable to the capital or operating costs of the airport.

6. **Utility Relocation in Grant.** The Sponsor understands and agrees that:

   A. The United States will not participate in the cost of any utility relocation unless and until the Sponsor has submitted evidence satisfactory to the FAA that the Sponsor is legally responsible for payment of such costs;

   B. FAA participation is limited to those utilities located on-airport or off-airport only where the Sponsor has an easement for the utility; and

   C. The utilities must serve a purpose directly related to the Airport.

The Sponsor's acceptance of this Offer and ratification and adoption of the Grant Application incorporated herein shall be evidenced by execution of this instrument by the Sponsor, as hereinafter provided, and this Offer and Acceptance shall comprise a Grant Agreement, as provided by the CARES Act, constituting the contractual obligations and rights of the United States and the Sponsor with respect to the accomplishment of the Grant and compliance with the assurances and conditions as provided herein. Such Grant Agreement shall become effective upon the Sponsor's acceptance of this Offer.

Please read the following information: By signing this document, you are agreeing that you have reviewed the following consumer disclosure information and consent to transact business using electronic communications, to receive notices and disclosures electronically, and to utilize electronic signatures in lieu of using paper documents. You are not required to receive notices and disclosures or sign documents electronically. If you prefer not to do so, you may request to receive paper copies and withdraw your consent at any time.

UNITED STATES OF AMERICA
FEDERAL AVIATION ADMINISTRATION

_____
(Signature)

John P. Bauer
(Typed Name)

Manager, Denver Airports District Office
(Title of FAA Official)

PART II - ACCEPTANCE

The Sponsor does hereby ratify and adopt all assurances, statements, representations, warranties, covenants, and agreements contained in the Grant Application and incorporated materials referred to in the foregoing Offer under Part II of this Agreement, and does hereby accept this Offer and by such acceptance agrees to comply with all of the terms and conditions in this Offer and in the Grant Application.

Please read the following information: By signing this document, you are agreeing that you have reviewed the following consumer disclosure information and consent to transact business using electronic communications, to receive notices and disclosures electronically, and to utilize electronic signatures in lieu of using paper documents. You are not required to receive notices and disclosures or sign documents electronically. If you prefer not to do so, you may request to receive paper copies and withdraw your consent at any time.

I declare under penalty of perjury that the foregoing is true and correct.

Dated _____

CITY OF VERNAL, UTAH
(Name of Sponsor)

_____
(Signature of Sponsor's Authorized Official)

By: _____
(Typed Name of Sponsor's Authorized Official)

Title: _____
(Title of Sponsor's Authorized Official)

CERTIFICATE OF SPONSOR'S ATTORNEY

I, , acting as Attorney for the Sponsor do hereby certify:

That in my opinion the Sponsor is empowered to enter into the foregoing Grant Agreement under the laws of the State of Utah. Further, I have examined the foregoing Grant Agreement and the actions taken by said Sponsor and Sponsor's official representative has been duly authorized and that the execution thereof is in all respects due and proper and in accordance with the laws of the said State and the CARES Act. The Sponsor understands funding made available under this Grant Agreement may only be used to reimburse for airport operational and maintenance expenses, and debt service payments. The Sponsor further understands it may submit a separate request to use funds for new airport/project development purposes, subject to additional terms, conditions, and assurances. Further, it is my opinion that the said Grant Agreement constitutes a legal and binding obligation of the Sponsor in accordance with the terms thereof.

Please read the following information: By signing this document, you are agreeing that you have reviewed the following consumer disclosure information and consent to transact business using electronic communications, to receive notices and disclosures electronically, and to utilize electronic signatures in lieu of using paper documents. You are not required to receive notices and disclosures or sign documents electronically. If you prefer not to do so, you may request to receive paper copies and withdraw your consent at any time.

Dated _____

By: _____
(Signature of Sponsor's Attorney)

The Sponsor does hereby ratify and adopt all assurances, statements, representations, warranties, covenants, and agreements contained in the Grant Application and incorporated materials referred to in the foregoing Offer under Part II of this Agreement, and does hereby accept this Offer and by such acceptance agrees to comply with all of the terms and conditions in this Offer and in the Grant Application.

Please read the following information: By signing this document, you are agreeing that you have reviewed the following consumer disclosure information and consent to transact business using electronic communications, to receive notices and disclosures electronically, and to utilize electronic signatures in lieu of using paper documents. You are not required to receive notices and disclosures or sign documents electronically. If you prefer not to do so, you may request to receive paper copies and withdraw your consent at any time.

I declare under penalty of perjury that the foregoing is true and correct.

Dated _____

COUNTY OF UINTAH, UTAH

(Name of Sponsor)

_____

(Signature of Sponsor's Authorized Official)

By: _____

(Typed Name of Sponsor's Authorized Official)

Title: _____

(Title of Sponsor's Authorized Official)

CERTIFICATE OF SPONSOR'S ATTORNEY

I, , acting as Attorney for the Sponsor do hereby certify:

That in my opinion the Sponsor is empowered to enter into the foregoing Grant Agreement under the laws of the State of Utah. Further, I have examined the foregoing Grant Agreement and the actions taken by said Sponsor and Sponsor's official representative has been duly authorized and that the execution thereof is in all respects due and proper and in accordance with the laws of the said State and the CARES Act. The Sponsor understands funding made available under this Grant Agreement may only be used to reimburse for airport operational and maintenance expenses, and debt service payments. The Sponsor further understands it may submit a separate request to use funds for new airport/project development purposes, subject to additional terms, conditions, and assurances. Further, it is my opinion that the said Grant Agreement constitutes a legal and binding obligation of the Sponsor in accordance with the terms thereof.

Please read the following information: By signing this document, you are agreeing that you have reviewed the following consumer disclosure information and consent to transact business using electronic communications, to receive notices and disclosures electronically, and to utilize electronic signatures in lieu of using paper documents. You are not required to receive notices and disclosures or sign documents electronically. If you prefer not to do so, you may request to receive paper copies and withdraw your consent at any time.

Dated _____

By: _____
(Signature of Sponsor's Attorney)

CARES ACT ASSURANCES

AIRPORT SPONSORS

A. General.

1. These assurances are required to be submitted as part of the application by sponsors requesting funds under the provisions of the Coronavirus Aid, Relief, and Economic Security Act of 2020 (CARES Act or "the Act"), Public Law Number, Public Law 116-136. As used herein, the term "public agency sponsor" means a public agency with control of a public-use airport; the term "private sponsor" means a private owner of a public-use airport; and the term "sponsor" includes both public agency sponsors and private sponsors.

2. Upon acceptance of this Grant offer by the sponsor, these assurances are incorporated into and become part of this Grant Agreement.

B. Sponsor Certification.

The sponsor hereby assures and certifies, with respect to this Grant that:

It will comply with all applicable Federal laws, regulations, executive orders, policies, guidelines, and requirements as they relate to the application, acceptance, and use of Federal funds for this Grant including but not limited to the following:

FEDERAL LEGISLATION

a. Federal Fair Labor Standards Act - 29 U.S.C. 201, et seq.

b. Hatch Act – 5 U.S.C. 1501, et seq.

c. Uniform Relocation Assistance and Real Property Acquisition Policies Act of 1970 Title 42 U.S.C. 4601, et seq.

d. National Historic Preservation Act of 1966 - Section 106 - 16 U.S.C. 470(f).

e. Archeological and Historic Preservation Act of 1974 - 16 U.S.C. 469 through 469c.

f. Native Americans Grave Repatriation Act - 25 U.S.C. Section 3001, et seq.

g. Clean Air Act, P.L. 90-148, as amended.

h. Coastal Zone Management Act, P.L. 93-205, as amended.

i. Flood Disaster Protection Act of 1973 - Section 102(a) - 42 U.S.C. 4012a.

j. Title 49, U.S.C., Section 303, (formerly known as Section 4(f)).

k. Rehabilitation Act of 1973 - 29 U.S.C. 794.

l. Title VI of the Civil Rights Act of 1964 (42 U.S.C. § 2000d et seq., 78 stat. 252) (prohibits discrimination on the basis of race, color, national origin).

m. Americans with Disabilities Act of 1990, as amended, (42 U.S.C. § 12101 et seq.), prohibits discrimination on the basis of disability).

n. Age Discrimination Act of 1975 - 42 U.S.C. 6101, et seq.

o. American Indian Religious Freedom Act, P.L. 95-341, as amended.

p. Architectural Barriers Act of 1968 -42 U.S.C. 4151, et seq.

q. Power plant and Industrial Fuel Use Act of 1978 - Section 403- 2 U.S.C. 8373.

r. Contract Work Hours and Safety Standards Act - 40 U.S.C. 327, et seq.

s. Copeland Anti-kickback Act - 18 U.S.C. 874.1.

t. National Environmental Policy Act of 1969 - 42 U.S.C. 4321, et seq.

u. Wild and Scenic Rivers Act, P.L. 90-542, as amended.

v. Single Audit Act of 1984 - 31 U.S.C. 7501, et seq.

w. Drug-Free Workplace Act of 1988 - 41 U.S.C. 702 through 706.

x. The Federal Funding Accountability and Transparency Act of 2006, as amended (Pub. L. 109-282, as amended by section 6202 of Pub. L. 110-252).

EXECUTIVE ORDERS

a. Executive Order 11246 - Equal Employment Opportunity

b. Executive Order 11990 - Protection of Wetlands

c. Executive Order 11998 – Flood Plain Management

d. Executive Order 12372 - Intergovernmental Review of Federal Programs

e. Executive Order 12699 - Seismic Safety of Federal and Federally Assisted New Building Construction

f. Executive Order 12898 - Environmental Justice

g. Executive Order 13788 - Buy American and Hire American

h. Executive Order 13858 - Strengthening Buy-American Preferences for Infrastructure Projects

FEDERAL REGULATIONS

a. 2 CFR Part 180 - OMB Guidelines to Agencies on Governmentwide Debarment and Suspension (Nonprocurement).

b. 2 CFR Part 200 - Uniform Administrative Requirements, Cost Principles, and Audit Requirements for Federal Awards.

c. 2 CFR Part 1200 - Nonprocurement Suspension and Debarment.

d. 28 CFR Part 35 - Discrimination on the Basis of Disability in State and Local Government Services.

e. 28 CFR § 50.3 - U.S. Department of Justice Guidelines for Enforcement of Title VI of the Civil Rights Act of 1964.

f. 29 CFR Part 1 - Procedures for predetermination of wage rates.

g. 29 CFR Part 3 - Contractors and subcontractors on public building or public work financed in whole or part by loans or grants from the United States.

h. 29 CFR Part 5 - Labor standards provisions applicable to contracts covering Federally financed and assisted construction (also labor standards provisions applicable to non-construction contracts subject to the Contract Work Hours and Safety Standards Act).

i. 41 CFR Part 60 - Office of Federal Contract Compliance Programs, Equal Employment Opportunity, Department of Labor (Federal and Federally assisted contracting requirements).

j. 49 CFR Part 20 - New restrictions on lobbying.

k. 49 CFR Part 21 - Nondiscrimination in Federally-assisted programs of the Department of Transportation - effectuation of Title VI of the Civil Rights Act of 1964.

l. 49 CFR Part 26 - Participation by Disadvantaged Business Enterprises in Department of Transportation Program .49 CFR Part 27 – Nondiscrimination on the Basis of Handicap in Programs and Activities Receiving or Benefiting from Federal Financial Assistance.

m. 49 CFR Part 28 - Enforcement of Nondiscrimination on the Basis of Handicap in Programs or Activities conducted by the Department of Transportation.

n. 49 CFR Part 30 - Denial of public works contracts to suppliers of goods and services of countries that deny procurement market access to U.S. contractors.

o. 49 CFR Part 32 - Government-wide Requirements for Drug-Free Workplace (Financial Assistance).

p. 49 CFR Part 37 - Transportation Services for Individuals with Disabilities (ADA).

q. 49 CFR Part 41 - Seismic safety of Federal and Federally assisted or regulated new building construction.

SPECIFIC ASSURANCES

Specific assurances required to be included in grant agreements by any of the above laws, regulations, or circulars are incorporated by reference in this Grant Agreement.

1. **Purpose Directly Related to the Airport**

   It certifies that the reimbursement sought is for a purpose directly related to the airport.

2. **Responsibility and Authority of the Sponsor.**

   a. Public Agency Sponsor:

      It has legal authority to apply for this Grant, and to finance and carry out the proposed grant; that an official decision has been made by the applicant's governing body authorizing the filing of the application, including all understandings and assurances contained therein, and directing and authorizing the person identified as the official representative of the applicant to act in connection with the application and to provide such additional information as may be required.

   b. Private Sponsor:

      It has legal authority to apply for this Grant and to finance and carry out the proposed Grant and comply with all terms, conditions, and assurances of this Grant Agreement. It shall designate an official representative and shall in writing direct and authorize that person to file this application, including all understandings and assurances contained therein; to act in

connection with this application; and to provide such additional information as may be required.

3. **Good Title.**

   It, a public agency or the Federal government, holds good title, satisfactory to the Secretary, to the landing area of the airport or site thereof, or will give assurance satisfactory to the Secretary that good title will be acquired.

4. **Preserving Rights and Powers.**

   a. It will not take or permit any action which would operate to deprive it of any of the rights and powers necessary to perform any or all of the terms, conditions, and assurances in this Grant Agreement without the written approval of the Secretary, and will act promptly to acquire, extinguish, or modify any outstanding rights or claims of right of others which would interfere with such performance by the sponsor. This shall be done in a manner acceptable to the Secretary.

   b. If the sponsor is a private sponsor, it will take steps satisfactory to the Secretary to ensure that the airport will continue to function as a public-use airport in accordance with this Grant Agreement.

   c. If an arrangement is made for management and operation of the airport by any agency or person other than the sponsor or an employee of the sponsor, the sponsor will reserve sufficient rights and authority to insure that the airport will be operated and maintained in accordance Title 49, United States Code, the regulations, and the terms and conditions of this Grant Agreement.

5. **Accounting System, Audit, and Record Keeping Requirements.**

   a. It shall keep all Grant accounts and records which fully disclose the amount and disposition by the recipient of the proceeds of this Grant, the total cost of the Grant in connection with which this Grant is given or used, and the amount or nature of that portion of the cost of the Grant supplied by other sources, and such other financial records pertinent to the Grant. The accounts and records shall be kept in accordance with an accounting system that will facilitate an effective audit in accordance with the Single Audit Act of 1984.

   b. It shall make available to the Secretary and the Comptroller General of the United States, or any of their duly authorized representatives, for the purpose of audit and examination, any books, documents, papers, and records of the recipient that are pertinent to this Grant. The Secretary may require that an appropriate audit be conducted by a recipient. In any case in which an independent audit is made of the accounts of a sponsor relating to the disposition of the proceeds of a Grant or relating to the Grant in connection with which this Grant was given or used, it shall file a certified copy of such audit with the Comptroller General of the United States not later than six (6) months following the close of the fiscal year for which the audit was made.

6. **Exclusive Rights.**

   The sponsor shall not grant an exclusive right to use an air navigation facility on which this Grant has been expended. However, providing services at an airport by only one fixed-based operator is not an exclusive right if—

a. it is unreasonably costly, burdensome, or impractical for more than one fixed-based operator to provide the services; and

b. allowing more than one fixed-based operator to provide the services requires a reduction in space leased under an agreement existing on September 3, 1982, between the operator and the airport.

7. **Airport Revenues.**

This Grant shall be available for any purpose for which airport revenues may lawfully be used. CARES Act Grant funds provided under this Grant Agreement will only be expended for the capital or operating costs of the airport; the local airport system; or other local facilities which are owned or operated by the owner or operator of the airport(s) subject to this agreement and all applicable addendums.

8. **Reports and Inspections.**

It will:

a. submit to the Secretary such annual or special financial and operations reports as the Secretary may reasonably request and make such reports available to the public; make available to the public at reasonable times and places a report of the airport budget in a format prescribed by the Secretary;

b. in a format and time prescribed by the Secretary, provide to the Secretary and make available to the public following each of its fiscal years, an annual report listing in detail:
    1. all amounts paid by the airport to any other unit of government and the purposes for which each such payment was made; and
    2. all services and property provided by the airport to other units of government and the amount of compensation received for provision of each such service and property.

9. **Civil Rights.**

It will promptly take any measures necessary to ensure that no person in the United States shall, on the grounds of race, creed, color, national origin, sex, age, or disability be excluded from participation in, be denied the benefits of, or be otherwise subjected to discrimination in any activity conducted with, or benefiting from, funds received from this Grant.

a. Using the definitions of activity, facility, and program as found and defined in §§ 21.23 (b) and 21.23 (e) of 49 CFR Part 21, the sponsor will facilitate all programs, operate all facilities, or conduct all programs in compliance with all non-discrimination requirements imposed by or pursuant to these assurances.

b. Applicability

    1. Programs and Activities. If the sponsor has received a grant (or other Federal assistance) for any of the sponsor's program or activities, these requirements extend to all of the sponsor's programs and activities.

    2. Facilities. Where it receives a grant or other Federal financial assistance to construct, expand, renovate, remodel, alter, or acquire a facility, or part of a

facility, the assurance extends to the entire facility and facilities operated in connection therewith.

3. Real Property. Where the sponsor receives a grant or other Federal financial assistance in the form of, or for the acquisition of, real property or an interest in real property, the assurance will extend to rights to space on, over, or under such property.

c. Duration.

The sponsor agrees that it is obligated to this assurance for the period during which Federal financial assistance is extended to the program, except where the Federal financial assistance is to provide, or is in the form of, personal property, or real property, or interest therein, or structures or improvements thereon, in which case the assurance obligates the sponsor, or any transferee for the longer of the following periods:

1. So long as the airport is used as an airport, or for another purpose involving the provision of similar services or benefits; or
2. So long as the sponsor retains ownership or possession of the property.

Required Solicitation Language. It will include the following notification in all solicitations for bids, Requests for Proposals for work, or material under this Grant and in all proposals for agreements, including airport concessions, regardless of funding source:

"The **(Name of Sponsor)**, in accordance with the provisions of Title VI of the Civil Rights Act of 1964 (78 Stat. 252, 42 U.S.C. §§ 2000d to 2000d-4) and the Regulations, hereby notifies all bidders that it will affirmatively ensure that for any contract entered into pursuant to this advertisement, disadvantaged business enterprises and airport concession disadvantaged business enterprises will be afforded full and fair opportunity to submit bids in response to this invitation and will not be discriminated against on the grounds of race, color, or national origin in consideration for an award."

d. Required Contract Provisions.

1. It will insert the non-discrimination contract clauses requiring compliance with the acts and regulations relative to non-discrimination in Federally-assisted programs of the DOT, and incorporating the acts and regulations into the contracts by reference in every contract or agreement subject to the non-discrimination in Federally-assisted programs of the DOT acts and regulations.

2. It will include a list of the pertinent non-discrimination authorities in every contract that is subject to the non-discrimination acts and regulations.

3. It will insert non-discrimination contract clauses as a covenant running with the land, in any deed from the United States effecting or recording a transfer of real property, structures, use, or improvements thereon or interest therein to a sponsor.

4. It will insert non-discrimination contract clauses prohibiting discrimination on the basis of race, color, national origin, creed, sex, age, or handicap as a

covenant running with the land, in any future deeds, leases, license, permits, or similar instruments entered into by the sponsor with other parties:

a. For the subsequent transfer of real property acquired or improved under the applicable activity, grant, or program; and

b. For the construction or use of, or access to, space on, over, or under real property acquired or improved under the applicable activity, grant, or program.

e. It will provide for such methods of administration for the program as are found by the Secretary to give reasonable guarantee that it, other recipients, sub-recipients, sub-grantees, contractors, subcontractors, consultants, transferees, successors in interest, and other participants of Federal financial assistance under such program will comply with all requirements imposed or pursuant to the acts, the regulations, and this assurance.

f. It agrees that the United States has a right to seek judicial enforcement with regard to any matter arising under the acts, the regulations, and this assurance.

10. **Foreign Market Restrictions.**

It will not allow funds provided under this Grant to be used to fund any activity that uses any product or service of a foreign country during the period in which such foreign country is listed by the United States Trade Representative as denying fair and equitable market opportunities for products and suppliers of the United States in procurement and construction.

11. **Acquisition Thresholds.**

The FAA deems equipment to mean tangible personal property having a useful life greater than one year and a per-unit acquisition cost equal to or greater than $5,000. Procurements by micro-purchase means the acquisition of goods or services for which the aggregate dollar amount does not exceed $10,000. Procurement by small purchase procedures means those relatively simple and informal procurement methods for securing goods or services that do not exceed the $250,000 threshold for simplified acquisitions.

U.S. Department
of Transportation
**Federal Aviation
Administration**

Northwest Mountain Region
Colorado · Idaho · Montana · Oregon · Utah
Washington · Wyoming

Denver Airports District Office
26805 E. 68th Ave., Suite 224
Denver, CO 80249

The Honorable Doug Hammond
Mayor of Vernal
374 East Main Street
Vernal, Utah 84078

Mr. Brad Horrocks, Commission Chairman
Uintah County Commissioners
152 E 100 N, 2nd Floor West Wing
Vernal, Utah 84078

Vernal Regional Airport
Vernal, Utah
AIP Grant No. 3-49-0037-037-2020
Contract No. DOT-FA20NM-1014
DUNS No. 05-053-4361
Formal Amendment No. One

Dear Mayor Hammond and Commissioner Horrocks,

We are enclosing an electronic copy of Amendment No. One to the subject grant agreement. The amendment increases the maximum obligation of the United States as authorized under the Coronavirus Aid, Relief, and Economic Security (CARES) Act (Public Law 116-136) for the current fiscal year 2020 obligation and increases the federal share to 100 percent.

To properly enter into this amendment, you must do the following:

- The governing body must provide authority to execute the grant to the individual signing the grant; i.e. the sponsor's authorized representative.
- The Sponsor's attorney must sign and date the grant amendment *after* the Sponsor.
- You may not make any modification to the text, terms or conditions of this grant amendment.

Please don't hesitate to call Jesse Lyman if you have any questions. Jesse can be reached at (303) 342-1262.

Sincerely,

John P. Bauer, Manager
Denver Airports District Office

enclosure

U.S. Department
of Transportation
Federal Aviation Administration

Airports Division
Northwest Mountain Region
Colorado,Utah,Wyoming

05-053-4361
(DUNS No)

Vernal Regional Airport
(Airport/Planning Area)

AMENDMENT NO. ONE TO GRANT AGREEMENT AIP GRANT NO. 3-49-0037-037-2020

WHEREAS, the Federal Aviation Administration (hereinafter referred to as the "FAA") has determined it to be in the interest of the United States that the Grant Agreement between the FAA, acting for and on behalf of the United States, and the City of Vernal and County of Uintah, Utah (hereinafter referred to as the "Sponsor"), accepted by said Sponsor on March 31, 2020, be amended to increase the maximum obligation of the United States as authorized under the Coronavirus Aid, Relief, and Economic Security (CARES) Act (Public Law 116-136) for the current fiscal year 2020 obligation. The CARES Act provides funds to increase the federal share to 100 percent for Airport Improvement Program (AIP) and supplemental discretionary grants already planned for fiscal year 2020. Under normal circumstances, AIP grant recipients contribute a matching percentage of the project costs. Providing this additional funding and eliminating the local share should allow critical safety and capacity projects to continue as planned regardless of airport sponsors' current financial circumstances.

NOW THEREFORE, WITNESSETH:

That in consideration of the benefits to accrue to the parties hereto, the FAA on behalf of the United States, on the one part, and the Sponsor, on the other part, do hereby mutually agree that the said Grant Agreement be and hereby is amended as follows:

> Decrease the local/state share by $32,641, and increase Maximum Federal Obligation by $32,642 (from $620,197 to $652,839) to include the current fiscal year 2020 obligation;

The Federal Aviation Administration, for and on behalf of the United States, hereby offers and agrees to pay one hundred (100%) percent of the allowable costs incurred up to $652,839.

All other terms and conditions of the Grant Agreement remain in full force and effect.

IN WITNESS WHEREOF, the parties hereto have caused this amendment to said Grant Agreement to be duly executed as of

_____ .

UNITED STATES OF AMERICA
FEDERAL AVIATION ADMINISTRATION

_____
(Signature)

John P. Bauer
(Typed Name)

Manager, Denver Airports District Office
(Title of FAA Official)

05-053-4361

(DUNS No)

Vernal Regional Airport

(Airport/Planning Area)

CITY OF VERNAL, UTAH

(Name of Sponsor)

(Signature of Sponsor's Designated Official Representative)

(Typed Name of Sponsor's Designated Official Representative)

(Typed Title of Sponsor's Designated Official Representative)

(Date)

CERTIFICATE OF SPONSOR'S ATTORNEY

I, , acting as Attorney for the Sponsor do hereby certify:

That I have examined the foregoing Amendment to the Grant Agreement and the proceedings taken by said Sponsor relating thereto, and find that the execution thereof by said Sponsor has been duly authorized and is in all respects due and proper and in accordance with the laws of the State of Utah and further that, in my opinion, said Amendment to the Grant Agreement constitutes a legal and binding obligation of the Sponsor in accordance with the terms thereof.

Dated

By:

(Signature of Sponsor's Attorney)

05-053-4361

(DUNS No)

Vernal Regional Airport

(Airport/Planning Area)

COUNTY OF UINTAH, UTAH

(Name of Sponsor)

(Signature of Sponsor's Designated Official Representative)

(Typed Name of Sponsor's Designated Official Representative)

(Typed Title of Sponsor's Designated Official Representative)

(Date)

CERTIFICATE OF SPONSOR'S ATTORNEY

I, , acting as Attorney for the Sponsor do hereby certify:

That I have examined the foregoing Amendment to the Grant Agreement and the proceedings taken by said Sponsor relating thereto, and find that the execution thereof by said Sponsor has been duly authorized and is in all respects due and proper and in accordance with the laws of the State of Utah and further that, in my opinion, said Amendment to the Grant Agreement constitutes a legal and binding obligation of the Sponsor in accordance with the terms thereof.

Dated

By: _____

(Signature of Sponsor's Attorney)

RESOLUTION 2020-05

A RESOLUTION OF THE VERNAL CITY COUNCIL AUTHORIZING THE EXECUTION OF AN INTERLOCAL AGREEMENT WITH NAPLES CITY AND UINTAH COUNTY FOR STORM WATER SYSTEM PRESERVATION AND ENHANCEMENT, ROAD CROSSING AND ROAD SAFETY FUNDING.

WHEREAS, the parties are authorized by the Utah Interlocal Cooperation Act, as set forth in Title 11, Chapter 13, Utah Code Ann. To enter into agreements with other public agencies on the basis of mutual advantage and to more efficiently provide government facilities, services and improvements to the general public; and

WHEREAS, Naples City, Vernal City and Uintah County have been using the Ashley Central Canal for storm water collection and diversion for many years; and

WHEREAS, beginning in 2020 and 2021, Ashley Central Irrigation Co. intends to pipe the complete length of the Central Canal which will severely limit its ability to receive storm water; and

WHEREAS, Ashley Central Irrigation Co. has agreed and committed to allow the parties hereto to continue to utilize the abandoned Ashley Central Canal for storm water collection and conveyance and to construct the piped canal beside the existing canal channel and to convey to the entities rights to use, improve, and maintain the existing canal as a viable channel for storm water management; and

WHEREAS, Uintah County has obtained funding for the three entities involved, Vernal, Naples, and County from NRCS for the flood channel conversion in the amount of $561,000.00; and

WHEREAS, additional funding sources for the project are: Utah Department of Transportation $150,000, Vernal City $25,000 cash, Uintah County $84,000 cash; and

WHEREAS, by this Agreement, the parties agree to provide the funding towards the project set forth herein and to act in concert and cooperatively and for the best interests of the public health, safety, and welfare to request that the balance of the funding be provided by the Utah Community Impact Board ("CIB") in the amount of $1,735,000 in a loan and grant; and

NOW THEREFORE, for and in consideration of the mutual promises, obligations, and/or covenants contained herein, and for other good and valuable consideration, receipt, fairness, and sufficiency of which are hereby acknowledged, the parties intending to be legally bound do hereby mutually agree as follows:

SECTION 1. ***Interlocal Agreement.*** The Vernal City Council desires to enter into this joint cooperation agreement.

SECTION 2. **Approval.** The Vernal City Council hereby approves the Interlocal Agreement referred to above and authorizes the Mayor to execute it on behalf of Vernal City.

SECTION 3. **Severability.** The provisions of this resolution shall be severable and if any

provision thereof or the application of such provision under any circumstances is held invalid, it shall not affect any other provision of this resolution or the application in a different circumstance.

SECTION 4. **Effective Date.** This resolution shall become effective immediately upon adoption by the governing or legislative bodies of Uintah County, Vernal City and Naples City and approval as to proper form and compliance with applicable law by the attorneys for each entity; and the filing of this agreement with the keeper of records for each entity that is a party hereto.

PASSED, AND ADOPTED this 20th day of May, 2020.

_____

Mayor Doug Hammond

ATTEST:

_____

Quinn Bennion, City Recorder (S E A L)

INTERLOCAL COOPERATIVE AGREEMENT FOR STORM WATER SYSTEM PRESERVATION AND ENHANCEMENT, ROAD CROSSING AND ROAD SAFETY FUNDING.

This Interlocal Cooperative Agreement for Storm Water System Preservation and Enhancement, Road Crossing and Road Safety Funding ("Agreement") is made and entered into by and between Naples City ("Naples") a municipal corporation of the State of Utah, Vernal City ("Vernal") a municipal corporation of the State of Utah and Uintah County ("County") a Utah political subdivision for the purpose of acting cooperatively to obtain funding for and to preserve and enhance storm water collection and management and road protection and public safety.

RECITALS

This Agreement is made and entered into by and between the parties based upon the following recitals, which are incorporated and are integral to this Agreement:

WHEREAS, the parties are authorized by the Utah Interlocal Cooperation Act, as set forth in Title 11, Chapter 13, Utah Code Ann. to enter into agreements with other public agencies on the basis of mutual advantage and to more efficiently provide governmental facilities, services and improvements to the general public; and

WHEREAS, Naples City, Vernal City and Uintah County have been using the Ashley Central Canal for storm water collection and diversion for many years, and

WHEREAS, as residential areas within the Ashley Valley have grown, in part to service the extraction industry in Uintah County, more storm water inlets have been introduced along the canal alignment, therefore producing more and additional storm water flow, and

WHEREAS, since its construction early in the settlement of Ashley Valley the Central Canal has been open and capable and has been used to receive storm water runoff and transport it for safe management and disposal; and

WHEREAS, beginning in 2020 and 2021 Ashley Central Irrigation Co. intends to pipe the complete length of the Central Canal which will severely limit its ability to receive storm water; and,

WHEREAS, in 2018, Sunrise Engineering was requested to perform a study to consider alternatives to address the flows resulting from the storm water runoff from roadways and residential subdivisions that have traditionally been using the Ashley Central Canal for storm water collection, within the boundaries of the three entities involved.

WHEREAS the study recommended the length of the Central Canal should remain open as a viable channel to continue to collect storm water runoff and provide effective flood control when compared with other options to address the same storm water flows (i.e. storm drains in roads or existing drainages); and

WHEREAS, Ashley Central Irrigation Co. has agreed and committed to allow the parties hereto to continue to utilize the abandoned Ashley Central Canal for storm water collection and conveyance and to construct the piped canal beside the existing canal channel and to convey to the entities rights to use, improve, and maintain the existing canal as a viable channel for storm water management; and

WHEREAS, there are twenty-two (22) road crossings as the canal passes through the Ashley Valley; and

WHEREAS, the parties hereto own and control road crossings and have a vested interest in preserving and protecting those public roads and assuring that construction of the road crossings meets the appropriate standards; and

WHEREAS, provisions need to be made to maintain a channel that will allow storm water to sufficiently pass through the road crossings after pipelines are installed by Ashley Central Canal; and

WHEREAS, Ashley Central Irrigation Co. and its Engineer, J.U.B, have designed the canal piping project to accommodate the use of the existing channel for storm water purposes; and

WHEREAS, in preparation for changing the open channels use from irrigation to storm water/flood control, some vegetation removal and reshaping of the channel will be required to facilitate the storm water flows in the abandoned canal; and

WHEREAS, the existing canal runs immediately adjacent to one of Naples City's busiest streets and has been a long-standing safety concern for the City due to multiple accidents and slide offs into the canal. Enclosing this section of the canal will address that critical public safety concern and will facilitate anticipated future roadway widening projects and prevent any further vehicles accidentally falling into the canal; and

WHEREAS, Naples City is coordinating with Ashley Central Irrigation Co. and J.U.B Engineering with the piping project to extend the existing storm drain culvert east of Highway 40 in Naples approximately 3,500 feet towards the East to address the public safety concerns and to allow capacity and structures for future storm water contributions in that area, and

WHEREAS, the enclosure along 2500 S. is anticipated to use a 54 inch diameter pipe to enclose the storm drain channel; and

WHEREAS, Naples City has contracted with J.U.B Engineers, the Engineer for the canal project, to provide cost estimates associated with this project and is thus coordinating how these projects can work together for a cost-effective outcome; and

WHEREAS, Uintah County has obtained funding for the three entities involved, Vernal, Naples, and County from NRCS for the flood channel conversion in the amount of $561,000.00

WHEREAS, additional funding sources for the project are; Utah Department of Transportation $150,000, Vernal City $25,000 cash, Uintah County $84,000 cash; and

WHEREAS, by this Agreement the parties agree to provide the funding towards the project set forth herein and to act in concert and cooperatively and for the best interests of the public health, safety, and welfare to request that the balance of the funding be provided by the Utah Community Impact Board ("CIB") in the amount of $1,735,000 in a loan and grant; and

WHEREAS the parties have designated Naples City as the lead entity due to the large portion of the project associated with 2500 S. in Naples; and

WHEREAS, the funding for the road crossings shall be requested in the form of a grant and the funding for the 2500 S. project in Naples shall be requested in the form of a zero interest loan; and

WHEREAS, the parties in addition to this funding and construction agreement, intend to enter into an agreement for the future cooperative management and maintenance and operation of the canal for storm water/flood control purposes; and

WHEREAS, Naples City will prepare and submit an application to the Community Impact Board for the funds needed for the storm water system and road crossingswith the support and cooperation of the other two entities; and,

WHEREAS, Naples City as the lead or managing entity shall contract on behalf of the parties with J.U.B Engineering for the design and construction management associated with those purposes outlined in this Agreement and shall arrange for the engineers to include within the bidding and construction documents for the Central Canal pipe project separate line items for the road crossings on behalf of the entities and for the 2500 S. canal enclosure project for Naples City, and

WHEREAS, it is anticipated that the construction shall be performed by the contractor for the Central Canal project , and shall be constructed concurrently with the canal project in order to undertake the projects in the most cost effective and efficient manner; and

WHEREAS, Naples shall coordinate through the engineers with the canal company to assure that the bidding and procurement process and final contract documents conform with Utah

Law funding requirements and with the policies and ordinances of Naples City and to assure that the road crossings and other construction on behalf of the participating entities conform with the standards of the entities and facilitate the conversion of the existing canal to a multi-jurisdictional storm water and flood water management function; and

WHEREAS, the bonding requirements of State Law shall be provided for on behalf of the entities as part of the construction documents, and

WHEREAS, acquisition and/or assurance of appropriate rights-of-way and easements for the project shall be the responsibility of the entity with jurisdiction of that portion of the project; and

WHEREAS, the entities shall enter into such agreements with the Ashley Central Irrigation Co. as are necessary and appropriate to facilitate the purposes of this Agreement.

NOW THEREFORE, for and in consideration of the mutual promises, obligations, and/or covenants contained herein, and for other good and valuable consideration, receipt, fairness, and sufficiency of which are hereby acknowledged, the parties intending to be legally bound do hereby mutually agree as follows:

Community Impact Board Application.

1. Naples City shall prepare and submit on behalf of the parties hereto an application to the Utah Community Impact Board for funding for the Storm Water, Road Crossing and Canal Enclosure Project as set forth herein. The other parties shall provide input, support, information and staff support as needed and requested in pursuing and preparing the application.

2. The application shall request a grant for the road crossings and canal work necessary to convert the Central Canal to a storm water system in the amount of $820,000 as specified in Exhibit A attached hereto and incorporated herein.

3. The application shall request funding in the amount of $1,065,000 to cover the storm water channel where it runs adjacent to 2500 South St. in Naples to eliminate the public safety hazard created by the open channel. The loan shall be paid by Naples City.

4. The CIB application shall include commitments for funding a portion of the road crossing and storm water system as follows:

Uintah County	$74,250
Vernal City	$24,750

UDOT	$150,000
NRCS	$651,000
Total non-CIB funds	$

Interlocal Agreement

5. Each of the parties hereto is a governmental entity within the State of Utah and is authorized to enter into agreements for joint and cooperative action on the basis of mutual advantage and to more efficiently provide governmental facilities, to receive the benefits of economy of scale by cooperative combined action, to provide services and improvements to the general public pursuant to the provisions of Title 11, Chapter 13, Utah Code Ann.

6. It is not the intent or purpose of this agreement to create a new entity but rather to provide for the parties to participate in a joint cooperative undertaking to obtain funding for the storm water and road crossing and covering project and to facilitate the other purposes as set forth in the Recitals. Naples City shall be the Administrator of this Agreement.

Design, Engineering, and Construction

7. Naples City shall be the lead or managing entity with respect to this Agreement, as such Naples City shall coordinate with J.U.B Engineers for the Ashley Central Irrigation Co. to facilitate the conversion of the canal to a storm water/flood water management facility and the construction of the road crossings and enclosure of the channel adjacent to 2500 South St. as a joint and concurrent project with the Ashley Central Canal piping project.

8. The bid documents and bidding process shall conform with State Law and Naples City Contracting and Procurement Policy. Naples shall work with the engineers to ensure that the work to be accomplished is warranted for no less than one year and that the warranty agreement is assignable to each entity upon its acceptance of the work. As part of the bidding process all contractors shall acknowledge that the contractor has full and final responsibility for the actions and work of any materialmen, or subcontractors employed by the contractor on the project.

9. The bidding documents and construction contracts and documents shall separate the costs for the storm water/flood water management work to be undertaken pursuant to this Agreement from the work to be performed on behalf of Ashley Central Irrigation Co. This shall include separate requests for progress payments and materials etc.

10. For purposes of the contracting, management, and inspection, Naples City, as the representative of the entities hereto, shall have the role of "Owner". Naples shall invite and

receive input from representatives of Vernal and County in managing, inspecting, and approving the work, and progress payments.

11. Each entity hereto shall be responsible to review the bidding documents and assure that the design and engineering for the road crossings within each entity conforms with that entities' standards and ordinances, and to notify Naples prior to finalization of the bidding and contract documents of any deficiencies.

12. Increases in cost which are approved pursuant to the contract documents shall be allocated for payment, if exceeding the available funding, to the party or entity within which the increased costs or expenses were generated.

13. Prior to the conclusion of the work, Naples shall notify each party in writing that the project is about to be completed. Each entity shall then conduct an evaluation of the project work to ensure that all contract requirements and specifications within its territory have been accomplished. Each party shall notify Naples in writing that it either accepts or refuses to accept the work within its territory.

14. If an entity refuses to accept the work within its territory, the documentation shall contain a specific basis for the refusal. Thereafter the refusing party and Naples will conduct negotiations with the engineer and contractor in an attempt to address and resolve the basis for the entities rejection of the work. If the work is accepted subject to the correction of deficiencies that become apparent during the contractor's guarantee period, Naples shall assign to that entity its rights under the contract to enforce the guarantee or warranty of the contractor. If, after receiving notice from Naples that the project has been completed, any entity does not provide notification of acceptance or rejection within 60 days, the project within that entity's territory shall be presumed to have been accepted by the entity, subject to the correction of any deficiencies that become apparent during the contractor's guarantee or warranty term.

15. Naples shall require that the contract documents require the contractor to provide insurance and assume the responsibility for claims which may be submitted by third parties in connection with the work being performed and to hold the parties harmless during the construction of the work being performed.

16. Each entity shall indemnify, hold harmless, and defend each other party against any and all claims connected with or arising from the action or negligence of that entities personnel. Each entity shall have all liability and shall defend, hold harmless, and indemnify the other contracting entities against all claims arising from issues related to easements and rights-of-way within the territory of the indemnifying entity.

Easements and Rights-Of-Way

17. It is anticipated that all of the work associated with the road crossings shall be performed pursuant to this Agreement shall be conducted within existing public road rights-of-way owned and controlled by the entities that are parties hereto. To the extent that additional easements or rights-of-way are required as part of the project the entity shall collectively pursue obtaining those easements and rights-of-way from Ashley Central Irrigation Co. or from the owners of the affected real property.

18. At the commencement of the work, Naples shall notify each party in writing that the contractor is ready to begin work on the project. Each entity shall provide in writing such assurances and documents as are necessary making available the roadways and rights-of-way necessary for the accomplishment of the work to be performed. Naples shall thereafter oversee the contractor in completing all approved work anticipated by the plans, specifications, and designs of the project.

19. If it becomes necessary to acquire any property rights through purchase or through the use of eminent domain, the party with jurisdiction over the land subject to that action shall be responsible to obtain the right-of-way or easement or other property rights at that party's expense.

20. Any assignments of property rights including rights-of-way and easements to Naples or to the contractor hired to construct the project work to facilitate the construction shall, upon completion and acceptance, be assigned back to the entity making the assignment.

Bonding

21. The construction documents shall segregate the work to be done for the parties hereto from the work to be done on behalf of Ashley Central Irrigation Co. and the bonding, including payment bond and performance bonds required for public projects under Utah Law shall be independent from any bonding required by Ashley Central Irrigation Co. and shall run in favor of the entities.

Effective date and term

22. This Agreement shall become effective immediately upon; approval by the governing or legislative bodies of Uintah County, Vernal City, and Naples City, and approval as to proper form and compliance with applicable law by the attorneys for each entity; and the filing of this agreement with the keeper of records for each entity that is a party hereto.

23. The term of this Agreement shall be 50 years or until such time as the parties by mutual consent terminate this Agreement.

Operation and Maintenance Agreement

24. The parties agree that in the event the funding is available and the parties are able to convert the Ashley Central Canal to a storm water or wastewater management and control facility the parties hereto shall enter into an additional Interlocal Agreement for the purposes of managing, maintaining, and operating that facility and allocating costs and responsibilities for providing that public service.

Notices

25. Notices required hereunder or that may be reasonably necessary in completion of the project work shall be considered as properly given if delivered in writing personally or sent by certified United States mail, postage prepaid with return receipt requested, addressed to the parties as follows:

Naples City
Joshua Bake, City Manager
1420 Weatherby Dr.
Vernal, UT 84078

Dennis L. Judd
Naples City Attorney
497 South Vernal Ave. Vernal, UT 84078

Vernal City
Quinn Bennion, City Manager
374 East Main
Vernal, Utah 84078

Dennis L. Judd
Vernal City Attorney
497 South Vernal Ave. Vernal, UT 84078

Uintah County
Uintah County Commission Chairman
2nd Floor West Wing
152 East 100 North
Vernal, Utah 84078

Jon Sterner
Deputy Uintah County Attorney
641 E 300 S # 200

Vernal, UT 84078

Budget

26. Each of the contracting entities agrees to deposit, prior to commencement of any work on the project, that entity's cash contribution as shown herein, into an account established and maintained solely for the purpose of paying the costs of the project and shall maintain and manage the account in accordance with the requirements of the Permanent Community Impact Board.

Waivers or Modification

27. No waiver or failure to enforce one or more parts or provisions of this Agreement shall be construed as a continuing waiver of any part or provision of this Agreement, which shall preclude the parties from receiving the full bargained for benefit under the terms and provisions of this Agreement.

Relationship of Parties

28. The relationship between the parties is an arms-length contractual relationship, and is not fiduciary in nature. Nothing contained in this Agreement will be deemed to create an association, partnership, or joint venture between the parties, give rise to fiduciary duties, or cause any of the parties to be liable or responsibility in any way for the actions, liabilities, debts or obligations of the other party. Parties shall not have any rights, power, or authority to make any representation or to assume or create any obligation, whether express or implied, on behalf of the other parties, or to bind the other parties in a manner, except as expressly authorized by this Agreement.

Binding Effect; Entire Agreement, Amendment

29. This Agreement is binding upon and shall inure to the benefit of the parties and their respective heirs, successors, assigns, officers, employees, agents, representatives, and to all other persons or entities claiming by, through or under them. This Agreement, including all attachments, constitutes and or represents the entire agreement and understanding between the parties with respect to the subject matter herein. There are no other written or oral agreements, understandings, or promises between the parties which are not set forth herein. Unless otherwise set forth herein, this Agreement supercedes and cancels all prior arrangements, negotiations, and understandings between the parties, whether written or oral which are not recited or addressed in this Agreement. Neither this Agreement nor any provisions hereof may be supplemented, amended, modified, changed, discharged or terminated orally. Rather this Agreement and all provisions hereof may only be supplemented, amended, modified, changed, discharged, or terminated by an instrument in writing, signed by the parties.

Enforcement of Agreement

30. The parties hereto shall be responsible for their respective attorney fees, expenses, and costs incurred by them in connection with this agreement.

Severability

31. If any part or provision of this Agreement is found to be prohibited or unenforceable, such part or provision of this agreement shall, as to such provision only, be inoperative, null and void to the extent of such prohibition or unenforceability without invalidating the remaining parts or provisions hereof, and any such prohibition or unenforceability shall not invalidate or render inoperative, or void the entire agreement or the remaining provisions of this Agreement.

No Third-Party Beneficiaries

32. This Agreement is entered into by the parties for the exclusive benefit of the parties and their respective successors, assigns and affiliated persons referred to herein. Except and only to the extent provided herein, no creditor or other third party shall have any rights under this Agreement.

Execution of Additional Documents

33. Each of the parties agrees to execute and deliver any and all additional papers, documents, instruments, and other assurances and shall do any and all acts or things reasonably necessary in connection with the performance of its obligations hereunder, to carry out the intent of the parties.

Counterparts

34. This Agreement may be executed in two or more counterparts, each of which shall be deemed an original and all of which together shall constitute one and the same instrument. In addition, the parties may execute this agreement electronically as provided by Utah Law or otherwise utilize and rely upon facsimile or email signatures.

IN WITNESS WHEREOF, the parties of executed this agreement, and represent to each other party that it has done so by authority of action of the legislative or governing body of the entity and pursuant to a resolution duly adopted authorizing the execution of this Agreement.

Uintah County

By:_____
Uintah Commission Chair

Attest:

By:_____
Uintah County Clerk/Auditor

Vernal City

By:_____
Vernal City Mayor

Attest:

By:_____
Vernal City Recorder

Naples City

By:_____
Naples City Mayor

Attest:

By:_____
Naples City Recorder

Approved as to form and conformance in the law:

Vernal City Attorney

Deputy Uintah County Attorney

Naples City Attorney

State of Utah

GARY R. HERBERT
Governor

SPENCER J. COX
Lieutenant Governor

DEPARTMENT OF TRANSPORTATION

CARLOS M. BRACERAS, P.E.
Executive Director

JASON E. DAVIS, P.E.
Deputy Director of Engineering and Operations

TERIANNE S. NEWELL, P.E.
Deputy Director of Planning and Investment

May 12, 2020

Mr. Doug Hammond
Mayor
Vernal City Corporation
374 E. Main Street
Vernal, UT 84078

Dear Mayor Hammond,

Notice of Termination and Replacement – Statewide Utility License Agreement

The Utah Department of Transportation (UDOT) has a Statewide Utility License Agreement (SULA) with Vernal City Corporation (City) on file dated May 6, 2015 (attached). UDOT is updating and replacing all SULAs that are more than 5 years old in order to bring them into conformance with current rules (R930-7) and form. This letter serves as UDOT's official 30-day written notice of termination, as required by paragraph 18 of the SULA. The City's SULA will terminate on June 11, 2020.

As stated in the SULA, this notice of termination does not affect any permits issued and approved under the terms of SULA. However, if a new SULA is not executed prior to the termination date noted above, no new encroachment permits will be issued by our regional offices to the City until the new SULA is in place.

Attached, for your records, is a copy of the current SULA that is up for termination along with a new, replacement SULA. Please review the City information on the replacement SULA for accuracy and completeness and notify UDOT if there are any corrections required. Upon receipt of any needed corrections, my office will prepare and send a final replacement SULA for signature.

Should you have any questions or concerns about this SULA or the termination/renewal process, please contact me, coreynelson@utah.gov.

Sincerely,

Corey Nelson, PE, PTOE
Statewide Utilities Director

Utilities • Work phone: (801) 965-4083 Cell: (385)-251-4134 • Facsimile (801) 955-9002 • www.udot.utah.gov
Calvin Rampton Complex • 4501 South 2700 West • Mailing Address P.O. Box 148460 • Salt Lake City, Utah 84114-8460

Keeping Utah Moving

Vernal City Corporation
374 E. Main Street
Vernal, UT 84078
Federal ID No. 87-6000290

STATEWIDE UTILITY LICENSE AGREEMENT

NON-INTERSTATE

This **AGREEMENT** is made by and between the **Utah Department of Transportation**, ("UDOT") and **Vernal City Corporation** ("City"), a political subdivision of the State of Utah. Each as party, ("Party") and together as parties, ("Parties").

RECITALS

WHEREAS, the Parties desire to assist in expediting the approval of UDOT permits for operating, constructing, and maintaining utility lines and related facilities ("Facilities") within state highway rights-of-way; and excluding longitudinal installations within the interstate highway rights-of-way; and

WHEREAS, the terms of this agreement shall apply to all issued encroachment permits; and

WHEREAS, this agreement shall apply to approved location and encroachment permits on state highway rights-of-way in the State of Utah which are within the responsibility and jurisdiction of UDOT; and

WHEREAS, the Parties desire that this agreement supersedes all previous utility license agreements executed between the Parties.

AGREEMENT

NOW THEREFORE, the Parties agree as follows:

1. **LICENSE**: UDOT grants a non-exclusive license to the City for Facilities that have been granted or will be granted an encroachment permit pursuant to Utah Administrative Code R930-7.

2. **UDOT AGREEMENT TO REVIEW APPLICATIONS**: This agreement is not an encroachment permit or a guarantee of an encroachment permit. However, UDOT agrees to promptly review any application for an encroachment permit that the City files pursuant to the procedures established in this agreement and Utah Administrative Code R930-7.

3. **APPROVAL**: Unless otherwise stated herein, or in any particular encroachment permit or agreement, all permits executed pursuant hereto will be deemed to be governed by the provisions of this agreement. Encroachment permit applications shall be presented to the appropriate UDOT Region/District Permits Office. UDOT may apply special limitations for any work within the right-of-way. The issuance and approval of an encroachment permit enables the City to proceed with the utility construction and permitted use in accordance with the terms of the encroachment permit.

4. **RESERVATION AND SPECIAL PROVISIONS**: UDOT has the right to require an agreement or specific

encroachment permit for any particular location and construction. Special provisions, as particular circumstances may dictate and as required by UDOT may be incorporated into any encroachment permit issued after this agreement is executed.

5. **INSPECTION**: UDOT may perform routine inspection of utility construction to monitor compliance with this agreement, encroachment permit, and with state and federal laws and regulations. UDOT's inspection does not relieve the City of its responsibilities in meeting the encroachment permit conditions and UDOT's specifications. The City is responsible for UDOT's inspection costs.

6. **COSTS**: The City shall pay the entire cost of the Facilities installation.

7. **BEGINNING CONSTRUCTION:** The City shall not begin any utility construction on UDOT right-of-way until UDOT issues the encroachment permit. The City shall complete the utility construction in accordance with UDOT requirements and within the allowable time period.

8. **TRAFFIC CONTROL**: The City shall conduct its utility construction and maintenance operations in compliance with UDOT's current Utah MUTCD or UDOT TC Series Drawings, whichever is more restrictive. All utility construction and maintenance operations shall be planned to keep interference with traffic to an absolute minimum. On heavily traveled highways, utility operations interfering with traffic shall not be conducted during periods of peak traffic flow. This work shall be performed to minimize closures of intersecting streets, road approaches, or other access points. The City shall submit in advance traffic control plans showing detours and signing operations to allow UDOT reasonable time to review the plans. The City shall not perform full or partial lane closure without prior approval of the UDOT Region/District Director or authorized representative. The City shall conform to UDOT approved traffic control plans and encroachment permit conditions.

9. **EXCAVATION, BACKFILL, COMPACTION, AND SITE RESTORATION**: The City shall perform all utility construction on UDOT right-of-way in compliance with R930-7, UDOT's then current Standard Specifications for Highway and Bridge Construction, UDOT's Permit Excavation Handbook, and all applicable state and federal laws and regulations.

10. **EMERGENCY WORK**: Emergency work may be done without prior encroachment permit if imminent danger of loss of life or significant damage to property exists. In emergency work situations where traffic lanes will be partially or fully blocked, the City or its representative will contact the UDOT Traffic Operations Center at (801) 887-3710 prior to establishing traffic control. In all emergency work situations, the City or its representative shall immediately contact UDOT on the first business day after the emergency and complete a formal encroachment permit application. Failure to contact UDOT for an emergency work situation and obtain an encroachment permit within the stated time period is considered to be a violation of the terms and conditions of this agreement and R930-7. At the discretion of the City, emergency work may be performed by a bonded contractor, public agency, or a utility

company. In all cases the City shall comply with the state law requiring notification of all utility owners prior to excavation. None of the provisions of this agreement are waived for emergency work except for the requirement of a prior encroachment permit.

11. **RESTORATION OF TRAFFIC SIGNAL EQUIPMENT OR TRANSPORTATION FACILITIES**: Any traffic signal equipment or transportation facilities, which are disturbed or relocated as a result of the City's work, must be restored in accordance with plans approved by UDOT. Restoration of traffic signal equipment or transportation facilities must be done at the City's expense by a qualified electrical contractor experienced in signal installation or a qualified contractor experienced in restoring other transportation facilities, retained by the City and approved in advance by UDOT. Work shall be scheduled to ensure that disruption of any traffic signal or transportation facilities operation is kept to a minimum.

12. **ACCESS**: Access for Facilities installation on the UDOT right-of-way shall be allowed only by a permit issued by UDOT to the City. The City will obtain the permit and abide by all conditions for policing and other controls in conformance with Utah Administrative Codes R930-6 as amended.

13. **MAINTENANCE**: The City shall at all times maintain, repair, construct and operate its Facilities at its expense. The Facilities will be serviced without access from any interstate highway or ramp. If the City fails to maintain its Facilities, UDOT may notify the City of any required maintenance needs. If the City fails to comply with UDOT's notification and complete the needed maintenance, then UDOT reserves the right, without relieving the City of its obligations, to reconstruct or make repairs to the Facilities to protect the right-of-way, as it may consider necessary, and the City shall reimburse UDOT for its cost.

14. **LIABILITY**: The City is not required to post a continuous bond as long as the City is a current member of the Utah Local Governments Trust. If the City is not a current member, the City shall maintain continuous commercial general liability (CGL) insurance with UDOT as an additional insured, in the minimum amount of $1,000,000 per occurrence with a $2,000,000 general aggregate and $2,000,000 completed operations aggregate. The liability of the City shall not be limited to the amount of the insurance policy. The policy shall protect the City and UDOT from claims for damages for personal injury, including accidental death, and from claims for property damage that may arise from the City's operations in the right-of-way. The City shall notify UDOT immediately in writing at the address listed below if this insurance is planned to be terminated or is terminated.

Or the City shall be self-insured to the limits stated in the Governmental Immunity Act, Utah Code Section 63G-7-604(1). Evidence of self-insurance must be provided by a letter from the City's Attorney or Risk Department. The City shall require CGL insurance with the same limits as described above of all its contractors and subcontractors naming the City and UDOT as additional insureds. Such insurance shall protect the City and UDOT from claims for damages for personal injury, including accidental death, and from claims for property damage that may arise from

work or operations performed in the right-of-way by itself, contractors, subcontractors or anyone directly or indirectly employed by any of them. Such insurance shall provide coverage for premises operations, acts of independent contractors, products, and completed operations. This insurance coverage shall be maintained for a continuous period until the City's Facilities are removed from UDOT's right-of-way.

Statewide Utilities Director
Utah Department of Transportation
4501 South 2700 West
Salt Lake City, Utah 84114-8460

UDOT may require a bond from the City for encroachment permits issued under this agreement. Utah Administrative Code R930-7-6(6)(b). The amount of the bond will be set according to the permitted scope of work but not less than $10,000. UDOT may proceed against the bond to recover all expenses incurred by UDOT, its employees or representatives to restore the sections of roadway not completed or damaged by the City to UDOT standards. The liability of the City shall not be limited to the amount of the bond.

The City will indemnify, defend, and hold harmless UDOT, its employees, and the State of Utah from responsibility for any damage or liability arising from City's construction, maintenance, repair, or any other related operation during the utility construction or as a result of the work pursuant to permits issued under this agreement.

15. **CANCELLATION OF ENCROACHMENT PERMITS AND LICENSE AGREEMENT**: UDOT may cancel the encroachment permit or this agreement for the following: a) any failure on the part of the City to comply with the terms and conditions set forth in the license agreement or the encroachment permit; and b) the failure of the City to pay any sum of money for costs incurred by UDOT in association with installation or construction review, inspection, reconstruction, repair, or maintenance of the Facilities. UDOT also may remove the Facilities and restore the highway and right-of-way at the sole expense of the City. Prior to any cancellation, UDOT shall notify the City in writing, setting forth the violations, and will provide the City a reasonable time to correct the violations to the satisfaction of UDOT. This agreement does not limit UDOT's authority under Utah Administrative Code R930-7.

16. **ASSIGNMENT**: Permits shall not be assigned without the prior written consent of UDOT. All assignees shall be required to execute a license agreement.

17. **SUCCESSORS AND ASSIGNS**: All obligations and agreements herein contained shall be binding upon the parties, their successors and assigns.

18. **FACILITIES CLEARANCE REQUIREMENT**: Facilities must be installed both above ground and buried to the proper vertical and horizontal clearances and minimum depth of bury according to the encroachment permit and Utah Administrative Code R930-7 to avoid conflict with UDOT's normal and routine maintenance activities. The City

shall avoid such conflicts by placing its Facilities in compliance with the required horizontal and vertical clearances and minimum depth of bury. If a variance in horizontal or vertical clearances or minimum depth of bury occurs in the field during utility construction, the City will seek a deviation approval from UDOT and amend the original encroachment permit to reflect the variance and deviation approval. UDOT's normal and routine maintenance operations are those not requiring excavations in excess of the minimum horizontal and vertical clearances and depth of bury.

In all cases the City shall protect, indemnify and hold harmless UDOT, its employees, and the State of Utah for damages because of the failure of the Facilities to meet the required horizontal and vertical clearances and minimum depth of bury. Any noncompliance to the above requirements may result in cancellation of the City's encroachment permit or this agreement. If the noncompliant Facilities need to be moved due to a UDOT project and there was no deviation granted by UDOT for the variance in horizontal or vertical clearances or minimum depth of bury less than minimum standards, the City must pay 100% of the relocation costs for that portion of the Facilities that were installed in violation of UDOT's required clearances at the time the encroachment permit was issued. If the City was granted a deviation, the City must provide the permit describing the deviation.

19. **TERMINATION OF LICENSE AGREEMENT**: This agreement will terminate in five years unless both Parties agree in writing within the five years to renew the agreement for an additional five years. However, this agreement may be terminated at any time by either party upon 30 days advance written notice to the other. Active encroachment permits previously issued and approved under a terminated agreement are not affected and remain in effect on the same terms and conditions set forth in the agreement, permits and R930-7. The obligation to maintain the continuous commercial general liability (CGL) insurance as described in paragraph (14) above continues until City's Facilities are removed from UDOT's right-of-way. The indemnification obligations in this agreement shall survive termination of the agreement.

20. **MISCELLANEOUS:**

a. The permitted use and occupancy of right-of-way for non-highway purposes is subordinate to the primary and highest interest for transportation and safety of the traveling public.

b. The failure of either Party to insist upon strict compliance of any of the terms and conditions, or failure or delay by either Party to exercise any rights or remedies provided in this agreement, or by law, will not release either Party from any obligations arising under this agreement.

c. Each Party agrees to undertake and perform all further acts that are reasonably necessary to carry out the intent and purpose of the Agreement at the request of the other Party.

d. This Agreement does not create any type of agency relationship, joint venture, or partnership between UDOT and City.

e. This Agreement shall be deemed to be made under and shall be governed by the laws of the State of Utah in all respects. Each person signing this Agreement warrants that the person has full legal capacity, power and authority to execute this Agreement for and on behalf of the respective Party and to bind such Party.

f. If any provision or part of a provision of this agreement is held invalid, illegal or unenforceable in any respect, such invalidity, illegality or unenforceability shall not affect any other provision. Each provision shall be deemed to be enforceable to the fullest extent under applicable law.

g. This Agreement may be executed in one or more counterparts, each of which shall be an original, with the same effect as if the signatures were made upon the same instrument. This Agreement may be delivered by facsimile or electronic mail.

h. This Agreement shall constitute the entire agreement and understanding of the Parties with respect to the subject matter hereof, and shall supersede all offers, negotiations and other agreements with respect thereto. Any amendment to this Agreement must be in writing and executed by authorized representatives of each Party.

i. The date of this agreement is the date this agreement is signed by the last Party.

IN WITNESS WHEREOF, the Parties hereto have caused these presents to be executed by their duly authorized officers as of the day and year first above written.

Approved by Vernal City Corporation

By: _____ _____
Signature Date

_____ _____
Name: (printed) Title

FOR THE UTAH DEPARTMENT OF TRANSPORTATION

By: _____ _____
Corey D. Nelson, PE, PTOE Date
Statewide Utilities Director

UDOT COMPTROLLER'S OFFICE

By: _____ _____
Contract Administrator Date

APPROVED AS TO FORM: This Form Agreement has been previously approved as to form by the office of the Legal Counsel for the Utah Department of Transportation on March 5, 2019.

Vernal City

Medical Comparison

		UnitedHealthcare			
		BM-VA 80% $1,000		AI-I9 80% $1,500 HSA	
		In-Network	Out-of-Network	In-Network	Out-of-Network
Deductible		$1,000/$2,000	$2,000/$4,000	$1,500/$3,000	$3,000/$6,000
Out of Pocket Maximum		$3,500/$7,000	$6,000/$12,000	$3,500/$7,000	$6,000/$12,000
Deductible Included in OOP Maximum		Yes		Yes	
Ded / OOP Embedded		Yes		No	
Professional Services					
Office Visits	Primary Care Physicians	$25	50% AD	20% AD	50% AD
	Specialists	$50	50% AD	20% AD	50% AD
	Mental Health & Chemical Dependency	$25	50% AD	20% AD	50% AD
	Urgent Care	$50	50% AD	20% AD	50% AD
	Emergency Room	$250	$250	20% AD	20% AD
	Minor Lab / X-Ray	0%	50% AD	20% AD	50% AD
	Major Lab / X-Ray	20% AD	50% AD	20% AD	50% AD
	Hospital Outpatient Surgery	20% AD	50% AD	20% AD	50% AD
	Preventive Care	0%	50% AD	0%	50% AD
Inpatient Services					
	Hospital / Physicians	20% AD	50% AD	20% AD	50% AD
	Mental Health & Chemical Dependency	20% AD	50% AD	20% AD	50% AD
Additional Benefits					
	Chiropractic/Manipulations	$25	50% AD	20% AD	50% AD
	Routine Eye Exam	0%	50% AD	0%	50% AD
Prescription Drugs					
Retail	Deductible	None		Medical Deductible Applies	
	Tier 1	$15		$15 AD	
	Tier 2	$35		$35 AD	
	Tier 3	$65		$65 AD	
	Tier 4	$100		$100 AD	
	Mail Order	2.5x Retial Retail		2.5x Retial	

Monthly Rates		Alt Option 2			
11	Employee	2	$666.53	9	$551.53
23	Two-Party	8	$1,399.71	15	$1,158.21
50	Family	11	$2,066.49	39	$1,709.94
84	**TOTAL BY PLAN**	21	$35,262.13	63	$89,024.58
TOTAL ALL EMPLOYEES		$124,286.71			
Percent of Increase		-0.31%			

Benefits illustrated in summary for comparison purposes only. Please refer to the carrier plan document for further plan details.

PROJECTED COSTS if go with0% increase

VERNAL CITY FY 2021 BENEFIT PACKAGE - HEALTH / DEN

United Health Care / PEHP dental - life						Full-Time Employee	
			$1000 deductible			**80/20 plan**	
Coverage Type	Life	Dental	Health	Total	%	City Cost	Employee Cost
Single:							
Health/ Traditional	$9.90	$51.84	$666.53	$728.27	**88%**	$640.88	$87.39
Health/ Premium	$9.90	$56.44	$666.53	$732.87	88%	$644.93	$87.94
Health/ Life - No	$9.90	0	$666.53	$676.43	88%	$595.26	$81.17
Traditional Dental /	$9.90	$51.84	0	$61.74	100%	$61.74	$0.00
Premium Dental /	$9.90	$56.44	0	$66.34	100%	$66.34	$0.00
Life Only	$9.90	0	0	$9.90	100%	$9.90	$0.00
Vision				$10.45		$0.00	$10.45
2-Party:							
Health/ Traditional	$9.90	$70.90	$1,399.71	$1,480.51	**88%**	$1,302.85	$177.66
Health/ Premium	$9.90	$77.18	$1,399.71	$1,486.79	88.0%	$1,308.38	$178.41
Health/ Life - No	$9.90	0	$1,399.71	$1,409.61	88%	$1,240.46	$169.15
Traditional Dental /	$9.90	$70.90	0	$80.80	100%	$80.80	$0.00
Premium Dental /	$9.90	$77.18	0	$87.08	100%	$87.08	$0.00
Life Only	$9.90	0	0	$9.90	100%	$9.90	$0.00
Vision				$20.48			$20.48
Family:							
Health/Traditional	$9.90	$107.32	$2,066.49	$2,183.71	**88%**	$1,921.66	$262.05
Health/ Premium	$9.90	$116.84	$2,066.49	$2,193.23	88.0%	$1,930.04	$263.19
Health/ Life - No	$9.90	0	$2,066.49	$2,076.39	88%	$1,827.22	$249.17
Traditional Dental /	$9.90	$107.32	0	$117.22	100%	$117.22	$0.00
Premium Dental /	$9.90	$116.84	0	$126.74	100%	$126.74	$0.00
Life Only	$9.90	0	0	$9.90	100%	$9.90	$0.00
Vision				$25.08		$0.00	$25.08

						Full-Time Employee	
			$1500/3000 HDHP			**80/20 plan**	
Coverage Type	Life	Dental	Health	Total	%	City Cost	Employee Cost
Single:							
Health/ Traditional	$9.90	$51.84	$551.53	$613.27	**88%**	$539.68	$73.59
Health/ Premium	$9.90	$56.44	$551.53	$617.87	88%	$543.73	$74.14

Health/ Life - No	$9.90	0	$551.53	$561.43	88%	$494.06	$67.37
Traditional Dental /	$9.90	$51.84	0	$61.74	100%	$61.74	$0.00
Premium Dental /	$9.90	$56.44	0	$66.34	100%	$66.34	$0.00
Life Only	$9.90	0	0	$9.90	100%	$9.90	$0.00
Vision				$10.45		$0.00	$10.45
2-Party:							
Health/ Traditional	$9.90	$70.90	$1,158.21	$1,239.01	**88%**	$1,090.33	$148.68
Health/ Premium	$9.90	$77.18	$1,158.21	$1,245.29	88.0%	$1,095.86	$149.43
Health/ Life - No	$9.90	0	$1,158.21	$1,168.11	88%	$1,027.94	$140.17
Traditional Dental /	$9.90	$70.90	0	$80.80	100%	$80.80	$0.00
Premium Dental /	$9.90	$77.18	0	$87.08	100%	$87.08	$0.00
Life Only	$9.90	0	0	$9.90	100%	$9.90	$0.00
Vision				$20.48		$0.00	$20.48
Family:							
Health/Traditional	$9.90	$107.32	$1,709.94	$1,827.16	**88%**	$1,607.90	$219.26
Health/ Premium	$9.90	$116.84	$1,709.94	$1,836.68	88.0%	$1,616.28	$220.40
Health/ Life - No	$9.90	0	$1,709.94	$1,719.84	88%	$1,513.46	$206.38
Traditional Dental /	$9.90	$107.32	0	$117.22	100%	$117.22	$0.00
Premium Dental /	$9.90	$116.84	0	$126.74	100%	$126.74	$0.00
Life Only	$9.90	0	0	$9.90	100%	$9.90	$0.00
Vision				$25.08		$0.00	$25.08

TAL / LIFE INSURANCE

Part-Time Employee		
%	City Cost	Employee Cost
76.0%	**$556.98**	$174.78
76.0%	**$514.09**	$175.89
76.0%	**$514.09**	$162.34
100%	$61.74	$0.00
100%	$66.34	$0.00
100%	$9.90	$0.00
	$0.00	$10.45
76.0%	**$1,125.19**	$355.32
76.0%	**$1,129.96**	$356.83
76.0%	**$1,071.30**	$338.31
100%	$80.80	$0.00
100%	$87.08	$0.00
100%	$9.90	$0.00
	$0.00	$20.48
76.0%	**$1,659.62**	$524.09
76.0%	**$1,666.85**	$526.38
76.0%	**$1,578.06**	$498.33
100%	**$117.22**	$0.00
100%	**$126.74**	$0.00
100%	**$9.90**	$0.00
	$0.00	$25.08

Part-Time Employee		
%	City Cost	Employee Cost
76.0%	$466.09	$147.18
76.0%	$469.58	$148.29

76.0%	$426.69	$134.74
100%	$61.74	$0.00
100%	$66.34	$0.00
100%	$9.90	$0.00
	$0.00	$10.45
76.0%	$941.65	$297.36
76.0%	$946.42	$298.87
76.0%	$887.76	$280.35
100%	$80.80	$0.00
100%	$87.08	$0.00
100%	$9.90	$0.00
	$0.00	$20.48
76.0%	$1,388.64	$438.52
76.0%	$1,395.88	$440.80
76.0%	$1,307.08	$412.76
100%	$117.22	$0.00
100%	$126.74	$0.00
100%	$9.90	$0.00
	$0.00	$25.08

VERNAL
RESOLUTION 2020-04

NOW THEREFORE, be it ordained by the Council of Vernal, in the State of Utah, as follows:

SECTION 1: **AMENDMENT** "Section 2.04.010 Exempt Employees." of the Vernal Personnel Manual is hereby *amended* as follows:

A M E N D M E N T

Section 2.04.010 Exempt Employees.

The exempt compensation schedule shall outline the salary ranges for the following employees:

A. City Manager
B. Assistant City Manager
C. Chief of Police
D. Finance Director
E. Police Lieutenant
F. Mayor
G. City Council members
H. Justice Court Judge (Salary established annually by City Council).
I. Public Works Director
J. City Recorder
K. Street Superintendent
L. Water / Sewer Superintendent
M. _____

(Amended 11/03/2004, Res.2004-15)

PASSED AND ADOPTED BY THE VERNAL COUNCIL
_____.

	AYE	NAY	ABSENT	ABSTAIN
Councilmember Nicholas Porter	_____	_____	_____	_____
Councilmember Travis Allan	_____	_____	_____	_____
Councilmember Dave Everett	_____	_____	_____	_____
Councilmember Bert Clark	_____	_____	_____	_____
Councilmember Ted Munford	_____	_____	_____	_____

Presiding Officer

_____
Doug Hammond, Mayor, Vernal

Attest

_____
QUINN B BENNION, City Manager / Recorder Vernal

Accounts Payable Report

for

March 2020

VERNAL CITY FINANCE DEPARTMENT
Accounts Payable Summary
March 2020

Dept/Fund		Description	Amount	Fund Total
		Room Tax Refund	198.96	
320		Business Licenses	7.82	
401		City Council	23,554.26	
413		Finance	14,076.18	
414		City Attorney	13,080.00	
415		Non Departmental	4,648.21	
416		Government Facilities	13,278.31	
418		Planning & Zoning	2,739.40	
419		IT	609.91	
420		Justice Court	(690.00)	
421		Police	10,597.87	
423		Victims Advocate	873.05	
441		Streets	42,794.51	
444		Motor Pool	16,122.99	
451		City Parks	2,193.17	
480		Inter-Intra Government Funds	16,010.94	
	10	Total General Fund		160,095.58
	21	Narcotics Strike Force	427.09	
	35	Streets Construction Fund	6,566.50	
	38	City Park Green Space Fund	9,974.40	
	39	City Storm Drain Project		
	40	Vitalization Fund	550.00	
	46	Housing Rehabilitation	850.00	
				18,367.99
50		Utility Deposits	355.44	
510		Water Department	76,509.32	
520		Sewer Department	96,819.19	
570		Solid Waste Department	34,393.47	
	50	Total Utility Fund		208,077.42
	64	Payroll Fund		55,340.84
	71	Trust Funds		7,693.94
				449,575.77

Report Criteria:
Invoices with totals above $0.00 included.
Paid and unpaid invoices included.

Vendor Name	Description	Invoice Date	Net Invoice Amount	Date Paid
GENERAL FUND				
10-1370000 TRAVEL ROOM TAX REFUND				
CRYSTAL INN	ROOM TAX	02/14/2020	138.20	03/12/2020
HILTON GARDEN INN	ROOM TAX	02/25/2020	42.13-	
MOUNTAIN AM CREDIT UNION	ROOM TAX	02/27/2020	19.72	03/25/2020
MOUNTAIN AM CREDIT UNION	ROOM TAX	02/21/2020	53.72	03/25/2020
MOUNTAIN AM CREDIT UNION	ROOM TAX	02/27/2020	15.50	03/25/2020
TRU BY HILTON	ROOM TAX	03/02/2020	13.95	03/02/2020
10-320-2100 BUSINESS LICENSES				
VERNAL EXPRESS LLP	BUSINESS LICENSE OVER PAY	03/10/2020	7.82	03/12/2020
Total :			206.78	
MAYOR & COUNCIL				
10-401-2300 TRAVEL				
CRYSTAL INN	ROOM MAYOR/COUNCIL LEGIS	02/14/2020	100.00	03/12/2020
MOUNTAIN AM CREDIT UNION	LODGING RWAU CONF	02/27/2020	160.00	03/25/2020
MOUNTAIN AM CREDIT UNION	MEALS ADMIN COMMITTEE ME	02/13/2020	80.14	03/25/2020
UTAH LEAGUE OF CITIES & TO	MID YR CONFERENCE - D. EVE	03/10/2020	290.00	04/06/2020
10-401-3830 YOUTH CITY COUNCIL				
CRYSTAL INN	YCC ROOM LEGISLATURE ON	02/14/2020	800.00	03/12/2020
10-401-3843 VISITOR CENTER				
UTAH PARKS & RECREATION	TRANSIENT ROOM TAX	12/31/2019	21,868.13	03/05/2020
10-401-3845 HOLLY-DAYS ACTIVITIES				
STRATA NETWORKS	HOLLY DAYS ADVERTISING	02/21/2020	250.00	03/12/2020
10-401-4600 MISCELLANEOUS SERVICES				
DAVIS FOOD AND DRUG	WATER	03/12/2020	5.99	04/16/2020
Total MAYOR & COUNCIL:			23,554.26	
FINANCE				
10-413-2400 OFFICE EXP, SUPPLIES, POSTAGE				
STAPLES	MISC OFFICE SUPPLIES	03/07/2020	359.83	03/12/2020
WAL-MART COMMUNITY BRC	SUPPLIES	03/18/2020	14.16	04/23/2020
10-413-2800 TELEPHONE				
STRATA NETWORKS	MONTHLY CELL PHONE SERVI	02/29/2020	41.19	03/12/2020
10-413-3100 PROFESSIONAL SERVICES				
CASELLE, INC.	COMPUTER SOFTWARE SUPP	03/03/2020	13,486.00	03/05/2020
10-413-3610 TRAINING				
MOUNTAIN AM CREDIT UNION	UFGOA CONF	02/27/2020	175.00	03/05/2020
Total FINANCE:			14,076.18	
CITY ATTORNEY				
10-414-3100 PROFESSIONAL SERVICES				
ALLRED BROTHERSON & HAR	CITY PROSECUTING ATTORNE	02/27/2020	6,550.00	03/05/2020
DENNIS L JUDD PC	MONTHLY CITY ATTORNEY RE	03/01/2020	1,500.00	03/05/2020
10-414-3120 PUBLIC DEFENDER SERVICES				
FLORES LAW P.C.	INDIGENT SERVICES	10/10/2019	365.00	03/19/2020

Vendor Name	Description	Invoice Date	Net Invoice Amount	Date Paid
FLORES LAW P.C.	INDIGENT SERVICES	10/10/2019	430.00	03/19/2020
FLORES LAW P.C.	INDIGENT SERVICES	10/10/2019	415.00	03/19/2020
FLORES LAW P.C.	INDIGENT SERVICES	10/10/2019	585.00	03/19/2020
SAM, REYNOLDS & VAN OOST	INDIGENT DEFENSE ATTORNE	03/01/2020	3,100.00	03/05/2020
10-414-3160 SPECIAL LEGAL SERVICES				
ALLRED BROTHERSON & HAR	CITY CIVIL	02/27/2020	135.00	03/05/2020
Total CITY ATTORNEY:			13,080.00	
CITY ADMINISTRATION				
10-415-2100 BOOKS, SUBSCRIPT, MEMBERSHIPS				
INTERNATIONAL INSTITUTE OF	ANNUAL MEMBERSHIP FEES	12/12/2019	280.00	03/25/2020
MOUNTAIN AM CREDIT UNION	MEMBERSHIP DUES	02/21/2020	100.00	03/25/2020
UINTAH BASIN STANDARD/VER	NEWSPAPER RENEWAL	03/05/2020	40.00	03/12/2020
10-415-2200 PUBLIC NOTICES				
UINTAH BASIN STANDARD/VER	NOTICE HELP WANTED METER	02/28/2020	57.00	03/12/2020
10-415-2300 TRAVEL				
CRYSTAL INN	ROOM ADMIN LEGISLATURE O	02/14/2020	100.00	03/12/2020
MOUNTAIN AM CREDIT UNION	PARKING	02/01/2020	10.00	03/25/2020
MOUNTAIN AM CREDIT UNION	MEAL TECH SUMMIT	02/04/2020	8.15	03/25/2020
MOUNTAIN AM CREDIT UNION	SPRING CONF CITY MANAGER	02/21/2020	100.00	03/25/2020
10-415-2400 OFFICE EXP, SUPPLIES, POSTAGE				
MOUNTAIN AM CREDIT UNION	MEAL UBTECH MEETING	02/06/2020	54.77	03/25/2020
MOUNTAIN AM CREDIT UNION	POSTAGE	02/19/2020	10.90	03/25/2020
PITNEY BOWES, INC.	POSTAGE MACHINE RENTAL	02/29/2020	415.95	03/12/2020
10-415-2800 TELEPHONE				
STRATA NETWORKS	MONTHLY CELL PHONE SERVI	02/29/2020	21.63	03/12/2020
STRATA NETWORKS	MONTHLY PHONE SERVICE	02/29/2020	230.35	03/12/2020
STRATA NETWORKS	MONTHLY PHONE SERVICE	02/29/2020	1,421.69	03/12/2020
10-415-4100 INSURANCE PREMIUMS				
UTAH LOCAL GOVERNMENT T	BOND - WATER BOARD	02/10/2020	1,297.00	03/12/2020
UTAH LOCAL GOVERNMENT T	ANNUAL GENERAL LIABILITY F	02/10/2020	366.00	03/12/2020
UTAH LOCAL GOVERNMENT T	CONTRACTOR EQUIPMENT EN	03/10/2020	134.77	03/25/2020
Total CITY ADMINISTRATION:			4,648.21	
GOVERNMENT FACILITIES				
10-416-2400 OFFICE EXP, SUPPLIES, POSTAGE				
MOUNTAIN AM CREDIT UNION	EXCEL CLASS	02/04/2020	75.00	03/25/2020
10-416-2500 EQPMT: SUPPLIES & MAINTENANCE				
MORT'S CAR WASH, INC.	MONTHLY CAR WASH FEES	02/29/2020	10.25	03/05/2020
10-416-2600 BLDG & GRNDS: SUPPLIES & MAINT				
AMAZON.COM	AMERICAN FLAGS	03/19/2020	137.98	05/07/2020
CODALE ELECTRIC SUPPLY, IN	ELECTRICAL REPAIR PARTS	02/18/2020	24.31	04/16/2020
INTERMOUNTAIN FARMERS AS	GLOVES	03/04/2020	20.34	04/16/2020
MILT'S ACE HARDWARE	TOILET SEATS/SUPPLIES	03/12/2020	4.78	04/09/2020
MILT'S ACE HARDWARE	MISC SUPPLIES	03/18/2020	40.84	04/09/2020
MOUNTAIN AM CREDIT UNION	PARTS FOR SAW	02/27/2020	13.87	03/25/2020
MOUNTAIN AM CREDIT UNION	EXCEL CLASS	02/04/2020	150.00	03/25/2020
SWAIN'S, INC.	KEYED LOCKSET	03/02/2020	45.98	03/12/2020
VERNAL WINNELSON	FAUCET	03/02/2020	61.77	
WAL-MART COMMUNITY BRC	WASHER/DRYER	03/19/2020	982.61	
WEST END CLEANERS, INC.	CITY BLDG RUGS	03/01/2020	192.80	03/12/2020
WEST END CLEANERS, INC.	CLEAN RUGS @ PUBLIC WORK	02/29/2020	56.00	03/12/2020

Vendor Name	Description	Invoice Date	Net Invoice Amount	Date Paid
10-416-2650 BLDG: JANITORIAL SUPPLIES				
BASIN CLEANING SYSTEMS	CLEANING SUPPLIES	02/26/2020	203.55	03/12/2020
MILT'S ACE HARDWARE	CLEANING SUPPLIES	03/02/2020	34.29	04/09/2020
WAXIE SANITARY SUPPLY	DISINFECTANT	03/18/2020	68.62	04/02/2020
10-416-2700 UTILITIES - PUBLIC WORKS				
DOMINION ENERGY	RENTAL GAS	02/28/2020	63.47	03/12/2020
DOMINION ENERGY	DECOR GAS	02/21/2020	321.46	03/05/2020
DOMINION ENERGY	FABRICATION SHOP	02/21/2020	234.83	03/05/2020
DOMINION ENERGY	PUBLIC WORKS GAS	02/21/2020	785.39	03/05/2020
DOMINION ENERGY	SEWER GAS	02/28/2020	356.07	03/12/2020
DOMINION ENERGY	SHED GAS	02/21/2020	261.71	03/05/2020
G & H GARBAGE SERVICE	PUBLIC WORKS	02/29/2020	106.89	03/05/2020
ROCKY MOUNTAIN POWER	RENTAL	03/02/2020	10.86	03/12/2020
ROCKY MOUNTAIN POWER	MONTHLY ELECTRIC SERVICE	02/26/2020	53.53	03/05/2020
ROCKY MOUNTAIN POWER	ONE-TIME EFFICIENCY CHARG	02/26/2020	2.99-	03/05/2020
ROCKY MOUNTAIN POWER	MONTHLY ELECTRIC SERVICE	02/26/2020	69.11	03/05/2020
ROCKY MOUNTAIN POWER	ONE-TIME EFFICIENCY CHARG	02/26/2020	9.04-	03/05/2020
ROCKY MOUNTAIN POWER	MONTHLY ELECTRIC SERVICE	02/25/2020	981.08	03/05/2020
VERNAL CITY UTILITIES	MONTHLY WATER SERVICE	02/29/2020	40.80	03/19/2020
VERNAL CITY UTILITIES	MONTHLY WATER SERVICE	02/29/2020	73.50	03/19/2020
VERNAL CITY UTILITIES	43 S 100 W	02/29/2020	106.20	03/19/2020
VERNAL CITY UTILITIES	MONTHLY WATER SERVICE	02/29/2020	73.50	03/19/2020
VERNAL CITY UTILITIES	MONTHLY WATER SERVICE	02/29/2020	40.80	03/19/2020
VERNAL CITY UTILITIES	MONTHLY WATER SERVICE	02/29/2020	73.50	03/19/2020
10-416-2800 TELEPHONE				
STRATA NETWORKS	MONTHLY CELL PHONE SERVI	02/29/2020	41.19	03/12/2020
10-416-3810 OTHER RENT: MUN BLDG AUTH				
DOMINION ENERGY	CITY BUILDING GAS	02/21/2020	2,079.20	03/05/2020
DOMINION ENERGY	OFFICE GAS	02/21/2020	405.49	03/05/2020
G & H GARBAGE SERVICE	CITY BUILDING	02/29/2020	81.51	03/05/2020
ROCKY MOUNTAIN POWER	CITY BUILDING	03/18/2020	4,290.70	03/25/2020
ROCKY MOUNTAIN POWER	OFFICE ELECTRIC	02/26/2020	456.69	03/05/2020
ROCKY MOUNTAIN POWER	ONE-TIME EFFICIENCY CHARG	02/26/2020	58.59-	03/05/2020
VERNAL CITY UTILITIES	MBA WATER	02/29/2020	87.16	03/19/2020
VERNAL CITY UTILITIES	CITY BUILDING	02/29/2020	131.30	03/19/2020
Total GOVERNMENT FACILITIES:			13,278.31	
PLANNING & ZONING DEVELOPMENT				
10-418-2300 TRAVEL				
MOUNTAIN AM CREDIT UNION	LODGING	02/21/2020	436.00	03/25/2020
TATE, MATTHEW	MILES UT CHAPTER ICC	03/05/2020	49.02	03/05/2020
10-418-2400 OFFICE EXP, SUPPLIES, POSTAGE				
MOUNTAIN AM CREDIT UNION	OFFICE SUPPLIES	02/06/2020	16.60	03/25/2020
MOUNTAIN AM CREDIT UNION	OFFICE SUPPLIES	02/12/2020	28.30	03/25/2020
MOUNTAIN AM CREDIT UNION	BINDERS	02/25/2020	9.42	03/25/2020
STAPLES	VOICE RECORDER	02/29/2020	63.99	03/12/2020
10-418-2500 MOTORPOOL				
MORT'S CAR WASH, INC.	MONTHLY CAR WASH FEES	02/29/2020	32.50	03/05/2020
10-418-2550 TOOLS & WORKING SUPPLIES				
MOUNTAIN AM CREDIT UNION	TOOLS	02/20/2020	22.07	03/25/2020
10-418-2800 TELEPHONE				
STRATA NETWORKS	MONTHLY CELL PHONE SERVI	02/29/2020	41.19	03/12/2020

Vendor Name	Description	Invoice Date	Net Invoice Amount	Date Paid
10-418-2805 AT&T DATA				
A T & T MOBILITY	I PAD SERVICE	02/22/2020	113.76	03/12/2020
10-418-3100 PROFESSIONAL SERVICES				
CRS CONSULTING ENGINEERS	STORAGE UNIT REVIEW	03/06/2020	275.00	03/19/2020
UINTAH ENGINEER & LAND SU	PLAN REVIEW W SIDE DR SUB	02/24/2020	230.00	03/05/2020
10-418-3150 PLAN REVIEW				
WEST COAST CODE CONSULT	LANDMARK ASSISTED LIVING	10/17/2019	1,527.83	03/12/2020
10-418-3610 TRAINING				
MOUNTAIN AM CREDIT UNION	MEALS TRAINING	02/05/2020	40.78	03/25/2020
MOUNTAIN AM CREDIT UNION	REGISTRATION CREDIT	03/25/2020	251.56-	
10-418-4521 UNIFORMS				
INTERMOUNTAIN FARMERS AS	ST WORK BOOTS	03/11/2020	94.50	04/02/2020
10-418-4550 SOFTWARE & UPGRADE EXPENSE				
UINTAH COUNTY RECORDER	PLANNING INTERNET CHARGE	03/01/2020	10.00	03/05/2020
Total PLANNING & ZONING DEVELOPMENT:			2,739.40	
I.T. DEPARTMENT				
10-419-2400 OFFICE EXP, SUPPLIES, POSTAGE				
AMAZON.COM	FLASH DRIVES/TAPE	03/03/2020	137.45	03/19/2020
MOUNTAIN AM CREDIT UNION	RETURN SHIPPING	02/01/2020	8.40	03/25/2020
10-419-2800 TELEPHONE				
STRATA NETWORKS	MONTHLY CELL PHONE SERVI	02/29/2020	21.63	03/12/2020
10-419-3100 PROFESSIONAL SERVICES				
STRATA NETWORKS	INTERNET	02/29/2020	179.93	03/12/2020
UINTAH COUNTY RECORDER	INTERNET CHARGES	03/01/2020	10.00	03/05/2020
10-419-4550 SOFTWARE & UPGRADE EXPENSE				
A T & T MOBILITY	IT AIR CARD	02/22/2020	43.23	03/12/2020
MOUNTAIN AM CREDIT UNION	DOMAIN REGISTRATION	02/25/2020	174.27	03/25/2020
MOUNTAIN AM CREDIT UNION	OFFICE 365	02/12/2020	35.00	03/25/2020
Total I.T. DEPARTMENT:			609.91	
JUSTICE COURT				
10-420-2300 TRAVEL				
HILTON GARDEN INN	LODGING FALL CLERKS CONF	02/25/2020	342.00-	
MOUNTAIN AM CREDIT UNION	SPRING JUDGES CONFERENC	02/07/2020	75.00	03/25/2020
SEARLE, L DAWN	MEALS & MILEAGE CLERKS CO	02/25/2020	608.76-	
10-420-2400 OFFICE EXP, SUPPLIES, POSTAGE				
OFFICE DEPOT INC	MISC OFFICE SUPPLIES	03/13/2020	164.13	03/19/2020
10-420-2800 TELEPHONE				
STRATA NETWORKS	MONTHLY CELL PHONE SERVI	02/29/2020	21.63	03/12/2020
Total JUSTICE COURT:			690.00-	
POLICE DEPARTMENT				
10-421-1319 UNIFORM ALLOWANCE				
VERNAL CITY POLICE DEPART	UNIFORM ALLOWANCE	03/25/2020	1,567.50	04/02/2020
10-421-2300 TRAVEL				
CAMPBELL, KEITH	MEALS CHIEF'S CONFERENCE	01/20/2020	138.00-	
CANNON, RYAN	MEALS DECEPTION TRAINING	03/10/2020	150.00	
CANNON, RYAN	MEALS DECEPTION TRAINING	03/10/2020	150.00-	
COLLOM, DALLON	MEALS DECEPTION TRAINING	03/10/2020	150.00	
COLLOM, DALLON	MEALS DECEPTION TRAINING	03/10/2020	150.00-	

Vendor Name	Description	Invoice Date	Net Invoice Amount	Date Paid
JOHNSTUN, MIKE	MEALS DECEPTION TRAINING	03/10/2020	150.00	
JOHNSTUN, MIKE	MEALS DECEPTION TRAINING	03/10/2020	150.00-	
MANNING, AMMON	MEALS TOP HANDS CONFERE	03/10/2020	138.00	
MOUNTAIN AM CREDIT UNION	MEALS SLC INTERVIEW	02/11/2020	42.17	03/25/2020
SMITH, SHAUN	MEALS LEADERSHIP SCHOOL	03/10/2020	107.00	04/06/2020
WATT, CHAD	MEALS MEDIA/PUBLIC RELATI	01/20/2020	215.00-	
10-421-2400 OFFICE EXP, SUPPLIES, POSTAGE				
MOUNTAIN AM CREDIT UNION	BOOK - REIMBURSED BY POLI	02/05/2020	30.47	03/25/2020
MOUNTAIN AM CREDIT UNION	LAPTOP BATTERY	02/05/2020	27.37	03/25/2020
MOUNTAIN AM CREDIT UNION	THUMBDRIVE	02/20/2020	23.81	03/25/2020
MOUNTAIN AM CREDIT UNION	FILE BOX	02/14/2020	4.88	03/25/2020
MOUNTAIN AM CREDIT UNION	USB PORT	02/20/2020	34.82	03/25/2020
MOUNTAIN AM CREDIT UNION	TAPE/DESK ORGANIZER	02/21/2020	14.68	03/25/2020
STAPLES	MISC OFFICE SUPPLIES	02/08/2020	138.91	03/05/2020
STAPLES	MISC OFFICE SUPPLIES	02/08/2020	170.48	03/05/2020
STAPLES	HAND SANITIZER	03/10/2020	17.84	03/25/2020
STAPLES	OFFICE SUPPLIES	03/10/2020	32.24	03/25/2020
STAPLES	ANTIBACTERIAL SOAP	03/11/2020	9.32	03/25/2020
STAPLES	MISC KITCHEN SUPPLIES	03/18/2020	43.25	03/25/2020
STAPLES	MISC KITCHEN SUPPLIES	03/18/2020	133.11	03/25/2020
UNITED PARCEL SERVICE	PARCEL POSTAGE	02/22/2020	300.00	03/05/2020
WAL-MART COMMUNITY BRC	BATTERIES/BOTTLED WATER	03/02/2020	82.70	03/25/2020
10-421-2500 EQPMT: SUPPLIES & MAINTENANCE				
DOWNTOWN AUTO GROUP	RADIATOR LEAK	02/24/2020	591.14	03/05/2020
EXECUTIVE IMPORTZ, INC.	INTERIOR DETAIL	03/02/2020	103.50	03/12/2020
MORT'S CAR WASH, INC.	MONTHLY CAR WASH FEES	02/29/2020	448.50	03/05/2020
MOUNTAIN AM CREDIT UNION	POWER SUPPLY SWITCH	02/11/2020	51.95	03/25/2020
SAFELITE FULFILLMENT, INC	WINDSHIELD REPAIR	02/18/2020	49.99	03/12/2020
SAFELITE FULFILLMENT, INC	WINDSHIELD REPAIR	02/18/2020	49.99	03/12/2020
10-421-2800 TELEPHONE				
VERNAL CITY POLICE DEPART	CELL PHONE ALLOWANCE	03/25/2020	840.00	04/02/2020
10-421-3600 EDUCATION				
SALT LAKE COMMUNITY COLL	CADET MEAL PLAN	01/31/2020	284.53	03/05/2020
10-421-3700 MAINTENANCE AGREEMENTS				
A T & T MOBILITY	POLICE AIR CARDS	02/20/2020	1,054.66	03/05/2020
10-421-4510 SPECIAL PUBLIC SAFETY				
SYMBOL ARTS LLC	SHIRT BADGE	02/20/2020	95.00	03/12/2020
UTAH DEPT ENVIRONMENT QU	REGISTER X-RAY MACHINE	03/04/2020	35.00	03/12/2020
VERNAL FIRE EXTINGUISHER	INSPECT/REFILL EXTINGUISHE	02/25/2020	168.00	03/05/2020
10-421-4513 CANINE EXPENSE				
INTERMOUNTAIN FARMERS AS	K9 FOOD FOR YAGER	02/03/2020	34.99	03/19/2020
INTERMOUNTAIN FARMERS AS	BEDDING FOR YAGER	02/12/2020	29.97	03/19/2020
INTERMOUNTAIN FARMERS AS	K9 FOOD FOR YAGER	03/16/2020	34.99	04/16/2020
MOUNTAIN AM CREDIT UNION	PACKTRACK RENEWAL	02/15/2020	100.00	03/25/2020
NAPLES CAR & TRUCK WASH, I	K9 DOG WASH	02/01/2020	35.75	03/12/2020
NAPLES CAR & TRUCK WASH, I	K9 DOG WASH	03/01/2020	9.50	03/12/2020
10-421-5003 TASERS				
PRO FORCE LAW ENFORCEME	TASERS/HOLSTERS/BATTERIE	02/13/2020	3,970.00	03/05/2020
10-421-7002 I.C.A.C. GRANT				
MOUNTAIN AM CREDIT UNION	ICAC PHONE	02/19/2020	44.86	03/25/2020
Total POLICE DEPARTMENT:			10,597.87	

Vendor Name	Description	Invoice Date	Net Invoice Amount	Date Paid
VICTIMS ADVOCATE				
10-423-2300 TRAVEL				
GLEDHILL, CASSIE	MEALS STATE IMPLEMENTATI	03/02/2020	43.00	03/02/2020
TRU BY HILTON	LODGING STATEWIDE IMPLEM	03/02/2020	104.64	03/02/2020
10-423-2400 OFFICE SUPPLIES, POSTAGE				
MOUNTAIN AM CREDIT UNION	YEAR CALENDAR	02/26/2020	85.15	03/25/2020
10-423-2500 EQPMT: SUPPLIES & MAINTENANCE				
MORT'S CAR WASH, INC.	MONTHLY CAR WASH FEES	02/29/2020	47.15	03/05/2020
10-423-2800 CELL PHONE				
STRATA NETWORKS	MONTHLY CELL PHONE SERVI	02/29/2020	82.38	03/12/2020
10-423-3610 TRAINING				
MOUNTAIN AM CREDIT UNION	CRIME VICTIM CONF	02/26/2020	160.76	03/25/2020
10-423-4600 V.A. CONTRIBUTION EXPENSE				
MOUNTAIN AM CREDIT UNION	RENTAL	02/20/2020	337.97	03/25/2020
MOUNTAIN AM CREDIT UNION	GAS	02/20/2020	12.00	03/25/2020
Total VICTIMS ADVOCATE:			873.05	
STREETS DEPARTMENT				
10-441-2500 EQPMT: SUPPLIES & MAINTENANCE				
DESERT SPLASH OF VERNAL, I	WATER	03/04/2020	8.00	04/02/2020
MID-AMERICAN RESEARCH CH	PENETRATING OIL/TAP	02/21/2020	300.16	03/12/2020
MIDWEST HOSE & SPECIALTY I	HOSE	02/21/2020	13.17	03/05/2020
MORT'S CAR WASH, INC.	MONTHLY CAR WASH FEES	02/29/2020	152.15	03/05/2020
NORTH EASTERN UTAH OFFIC	MISC OFFICE SUPPLIES	03/12/2020	102.78	04/09/2020
SWAIN'S, INC.	KEYS	03/05/2020	29.25	03/12/2020
10-441-2800 TELEPHONE				
STRATA NETWORKS	MONTHLY CELL PHONE SERVI	02/29/2020	141.71	03/12/2020
10-441-4521 UNIFORMS				
N' STITCHES, INC.	EMBROIDER NAME/LOGO JG	03/06/2020	10.50	03/12/2020
10-441-4530 SPECIAL HIGHWAY SUPPLIES				
C-A-L RANCH STORES	CONCRETE SUPPLIES	02/21/2020	19.97	03/05/2020
DAVIS FOOD AND DRUG	SNACKS FOR TRAINING	03/02/2020	92.37	04/16/2020
DAVIS FOOD AND DRUG	SNACKS FOR TRAINING	03/04/2020	70.27	04/16/2020
10-441-4640 STREET LIGHTING				
ROCKY MOUNTAIN POWER	CROSSWALK	02/26/2020	5.85	03/05/2020
ROCKY MOUNTAIN POWER	ONE-TIME EFFICIENCY CHARG	02/26/2020	.02-	03/05/2020
ROCKY MOUNTAIN POWER	CROSSWALK	03/02/2020	10.26	03/12/2020
ROCKY MOUNTAIN POWER	CROSSWALK	03/19/2020	5.60	03/25/2020
ROCKY MOUNTAIN POWER	BILLBOARD	02/24/2020	29.44	03/05/2020
ROCKY MOUNTAIN POWER	ONE-TIME EFFICIENCY CHARG	02/24/2020	2.52-	03/05/2020
ROCKY MOUNTAIN POWER	CROSSWALK	03/17/2020	5.85	03/25/2020
ROCKY MOUNTAIN POWER	CROSSWALK	03/16/2020	5.77	03/25/2020
ROCKY MOUNTAIN POWER	STREET LIGHTS	02/25/2020	19,722.95	03/05/2020
ROCKY MOUNTAIN POWER	REMOVAL OF STREET LIGHTS	01/06/2020	22,071.00	03/19/2020
Total STREETS DEPARTMENT:			42,794.51	
MOTOR POOL				
10-444-2500 EQPMT: SUPPLIES & MAINTENANCE				
AUTOZONE INC	VA1 BATTERY	02/03/2020	89.99-	04/09/2020
AUTOZONE INC	RD81 FRONT SHOCKS	02/21/2020	195.98-	04/09/2020
AUTOZONE INC	HEAVY DUTY BATTERY	03/03/2020	241.98	04/09/2020
AUTOZONE INC	OIL FILTERS	03/09/2020	13.46	04/09/2020

Vendor Name	Description	Invoice Date	Net Invoice Amount	Date Paid
CATE RENTAL & SALES LLC	RD24 LIFT CYLINDER	03/16/2020	1,213.34	03/25/2020
CATE RENTAL & SALES LLC	BOTTOM END KIT/SOLENOID	03/13/2020	874.24	03/25/2020
DESERT SPLASH OF VERNAL, I	WATER	03/17/2020	8.00	04/02/2020
HOLLAND EQUIPMENT	RD12 PUMP PACKING	03/12/2020	343.11	03/25/2020
INDUSTRIAL SUPPLY	RD44 GREASE GUN	03/18/2020	199.00	03/25/2020
INDUSTRIAL SUPPLY	FREIGHT	03/18/2020	12.54	03/25/2020
JACK'S GENERAL TIRE, INC.	RD25 RECAP TIRES	12/31/2019	4,862.00	03/05/2020
JACK'S GENERAL TIRE, INC.	MP24 FLAT REPAIR	12/31/2019	21.95	03/05/2020
JACK'S GENERAL TIRE, INC.	RD85 FLAT REPAIR/TUBE	12/31/2019	60.65	03/05/2020
JACK'S GENERAL TIRE, INC.	PD5 FLAT REPAIR	12/31/2019	21.95	03/05/2020
JACK'S GENERAL TIRE, INC.	RD10 FLAT REPAIR	01/03/2020	21.75	03/05/2020
JACK'S GENERAL TIRE, INC.	RD17 TIRE/SERVICE CALL	01/13/2020	392.00	03/05/2020
JACK'S GENERAL TIRE, INC.	RD29 FLAT REPAIR	01/23/2020	48.75	03/05/2020
JACK'S GENERAL TIRE, INC.	RD82 FRONT TIRES	02/28/2020	654.36	03/05/2020
JACK'S GENERAL TIRE, INC.	PD14 FLAT REPAIR	02/28/2020	18.95	03/05/2020
MAIN STREET AUTO PARTS	RD83 THREAD LOCK	03/02/2020	23.99	04/16/2020
MAIN STREET AUTO PARTS	OIL FILTERS	03/12/2020	10.84	04/16/2020
MORCON SPECIALTY INC	RD24 HYDRAULIC COUPLERS	02/28/2020	5.10	03/12/2020
MORCON SPECIALTY INC	RUBBER SEALS	02/28/2020	9.00	03/12/2020
MORCON SPECIALTY INC	RD10 HYD FITTINGS	03/05/2020	8.25	04/09/2020
NORTH EASTERN UTAH OFFIC	MISC OFFICE SUPPLIES	03/12/2020	20.56	04/09/2020
PEAK JCB	RD83 THROTTLE CABLE/SPRIN	02/27/2020	320.12	03/05/2020
10-444-2800 TELEPHONE				
STRATA NETWORKS	MONTHLY CELL PHONE SERVI	02/29/2020	62.82	03/12/2020
10-444-2900 FUEL				
FUELMAN - UTAH GASCARD	MONTHLY FUEL PURCHASES	03/02/2020	6,712.83	03/12/2020
10-444-2950 FUEL - SERVICE CHARGE				
FUELMAN - UTAH GASCARD	SERVICE FEE	03/02/2020	227.42	03/12/2020
Total MOTOR POOL:			16,122.99	
PARKWAYS/BOULEVARDS				
10-451-2600 MAIN STREET EXPENSE				
ROCKY MOUNTAIN POWER	500 N 500 W SPRINKLERS	02/26/2020	10.70	03/05/2020
ROCKY MOUNTAIN POWER	STORM RETENTION SPRINKLE	02/24/2020	10.48	03/05/2020
ROCKY MOUNTAIN POWER	PARK SPRINKLERS	02/24/2020	10.58	03/05/2020
ROCKY MOUNTAIN POWER	WALK PARK FEATURE	02/28/2020	10.26	03/12/2020
ROCKY MOUNTAIN POWER	WALK PARK STORAGE	02/28/2020	47.37	03/12/2020
10-451-2607 MAINTENANCE - AGGIE BLVDE				
ROCKY MOUNTAIN POWER	SPRINKLER CONTROLLER	03/10/2020	10.26	03/25/2020
10-451-4534 BANNER REPLACEMENT & REPAIR				
HOWARD WILSON DESIGN, LL	REPLACEMENT WINTER BANN	02/13/2020	2,093.52	03/12/2020
Total PARKWAYS/BOULEVARDS:			2,193.17	
TRANSFERS & CONTRIBUTIONS				
10-480-7341 STATE COURT SURCHARGE				
UTAH STATE TREASURER	ST SURCHARGE ON COURT FI	02/29/2020	16,010.94	03/05/2020
Total TRANSFERS & CONTRIBUTIONS:			16,010.94	
Total GENERAL FUND:			160,095.58	

Vendor Name	Description	Invoice Date	Net Invoice Amount	Date Paid
NARCOTICS STRIKE FORCE FUND				
21-2260000 WORKER'S COMP PAYABLE				
UTAH LOCAL GOVERNMENT T	UBNSF WORKERS COMP	12/10/2019	.30	03/12/2020
UTAH LOCAL GOVERNMENT T	UBNSF WORKERS COMP	01/10/2020	.30	03/12/2020
UTAH LOCAL GOVERNMENT T	UBNSF WORKERS COMP	02/10/2020	105.85	03/12/2020
UTAH LOCAL GOVERNMENT T	UBNSF W/C AUDIT	02/10/2020	31.16	03/12/2020
UTAH LOCAL GOVERNMENT T	UBNSF WORKERS COMP	03/10/2020	105.85	03/25/2020
Total :			243.46	
FUND EXPENDITURES				
21-400-2300 TRAVEL				
MOUNTAIN AM CREDIT UNION	LODGING COMMANDERS MTG	02/27/2020	125.80	03/25/2020
21-400-2850 CELLPHONE - SURVEILANCE				
A T & T MOBILITY	CRIME SCENE VAN	02/15/2020	57.83	03/25/2020
Total FUND EXPENDITURES:			183.63	
Total NARCOTICS STRIKE FORCE FUND:			427.09	
STREET CONSTRUCTION FUND				
FUND EXPENDITURES				
35-400-5510 SAFE SIDEWALK 500 N-UBH SR121				
JONES & DEMILLE ENGINEERI	500 NORTH SAFE SIDEWALK E	02/17/2020	2,395.00	03/05/2020
35-400-5511 SAFE ROUTES - 500 WEST				
CRS CONSULTING ENGINEERS	500 WEST SIDEWALK ENGINEE	03/06/2020	4,171.50	03/19/2020
Total FUND EXPENDITURES:			6,566.50	
Total STREET CONSTRUCTION FUND:			6,566.50	
GRANT / GREEN SPACE FUND				
FUND EXPENDITURES				
38-400-5522 INNOVATION EXPENSE - 2019				
BABCOCK DESIGN	DESIGN OF INNOVATION CENT	03/12/2020	5,000.00	04/09/2020
CODALE ELECTRIC SUPPLY, IN	MATERIALS FOR INNOVATION	02/05/2020	12.50	04/16/2020
CODALE ELECTRIC SUPPLY, IN	MATERIALS FOR INNOVATION	02/05/2020	22.00	04/16/2020
CODALE ELECTRIC SUPPLY, IN	METAL BOX/CONDUIT/REDUCE	02/18/2020	31.16	04/16/2020
CODALE ELECTRIC SUPPLY, IN	SMOKE DETECTORS	03/05/2020	66.43	04/16/2020
CODALE ELECTRIC SUPPLY, IN	ELECTRICAL FITTINGS/SUPPLI	03/18/2020	213.46	04/16/2020
CRS CONSULTING ENGINEERS	ENGINEERING FOR INNOVATIO	03/03/2020	3,380.00	03/12/2020
DAVIS FOOD AND DRUG	WATER	02/19/2020	8.76	03/12/2020
G & H GARBAGE SERVICE	ROLL OFF RENTAL	02/29/2020	90.00	03/12/2020
LOWE'S	CORNERBEAD	03/17/2020	40.47	04/09/2020
LOWE'S	LUMBER	03/06/2020	67.98	04/09/2020
LOWE'S	INSULATION	03/09/2020	48.58	04/09/2020
LOWE'S	DRYWALL/CORNERBEAD	03/02/2020	90.38	04/09/2020
LOWE'S	LUMBER	03/06/2020	56.90	04/09/2020
LOWE'S	SCREWS	03/06/2020	28.49	04/09/2020
MILT'S ACE HARDWARE	ABS COUPLING	03/09/2020	2.24	04/09/2020
ROOFING WORLD HOME IMPR	LUMBER/FILTER	03/02/2020	133.36	03/19/2020
ROOFING WORLD HOME IMPR	SHEETROCK/SUPPLIES	03/09/2020	66.97	03/25/2020
TURNER LUMBER, INC.	ANCHORS	02/18/2020	7.08	03/12/2020

Vendor Name	Description	Invoice Date	Net Invoice Amount	Date Paid
TURNER LUMBER, INC.	LUMBER/DRIVER	02/27/2020	37.34	03/12/2020
TURNER LUMBER, INC.	LUMBER	03/04/2020	92.80	04/09/2020
TURNER LUMBER, INC.	FOAM/LADDER	03/04/2020	93.17	04/09/2020
TURNER LUMBER, INC.	SUPPLIES	03/05/2020	39.37	04/09/2020
TURNER LUMBER, INC.	PLYWOOD/INSULATION	03/12/2020	356.35	04/09/2020
TURNER LUMBER, INC.	PARTICLE BOARD	03/12/2020	72.23-	04/09/2020
TURNER LUMBER, INC.	LUMBER	03/16/2020	40.13	04/09/2020
VERNAL WINNELSON	BOOT/SADDLE	02/28/2020	20.71	03/12/2020
Total FUND EXPENDITURES:			9,974.40	
Total GRANT / GREEN SPACE FUND:			9,974.40	
CDA \ VITALIZATION FUND				
FUND EXPENDITURES				
40-400-4400 REVITALIZATION EXPENSE				
UTAH LEAGUE OF CITIES & TO	TRUST PREMIUM RELIEF CRED	12/10/2019	323.00-	03/05/2020
UTAH LEAGUE OF CITIES & TO	CREDIT MEMO	12/31/2019	1,818.00-	03/05/2020
UTAH LEAGUE OF CITIES & TO	LIABILITY INS FOR CDRA	12/10/2019	2,691.00	03/05/2020
Total FUND EXPENDITURES:			550.00	
Total CDA \ VITALIZATION FUND:			550.00	
HOUSING REHABILITATION				
FUND EXPENDITURES				
46-400-5501 CDBG HOUSING REHAB CONSTRUCTIO				
STEARNS CONSTRUCTION INC	HANDRAIL FOR WOMENS SHEL	02/21/2020	850.00	03/05/2020
Total FUND EXPENDITURES:			850.00	
Total HOUSING REHABILITATION:			850.00	
VERNAL CITY UTILITIES FUND				
50-1140000 UTILITY CLEARING				
PRICE, JOHN	REFUND CREDIT BALANCE	02/01/2020	56.26	03/05/2020
SCHRAMM, JEFF	REFUND CREDIT BALANCE	02/11/2020	50.48	03/05/2020
50-2132000 UTILITY DEPOSITS				
APONTE, LIZZETEE	REFUND UTILITY DEPOSIT	02/19/2020	123.27	03/05/2020
BRIGHTON, RACHEL	REFUND UTILITY DEPOSIT	02/18/2020	18.18	03/05/2020
SFREDOO, NICOLE	REFUND UTILITY DEPOSIT	02/06/2020	35.78	03/05/2020
WERNER, WHITNEY & MAYETH	REFUND UTILITY DEPOSIT	02/28/2020	71.47	03/05/2020
Total :			355.44	
WATER DEPARTMENT				
50-510-2100 BOOKS, SUBSCRIPT, MEMBERSHIPS				
RURAL WATER ASSOCIATION	RWAU MEMBERSHIP DUES	01/03/2020	685.00	03/12/2020
50-510-2300 TRAVEL				
MOUNTAIN AM CREDIT UNION	LODGING RWAU CONF	02/23/2020	330.58	03/25/2020
MOUNTAIN AM CREDIT UNION	LODGING RWAU CONF	02/23/2020	404.38	03/25/2020
50-510-2400 OFFICE EXP, SUPPLIES, POSTAGE				
MANSFIELD PRINTING INC.	UTILITY BILLS/LATE NOTICE BL	01/23/2020	697.67	03/19/2020

Vendor Name	Description	Invoice Date	Net Invoice Amount	Date Paid
US POSTMASTER	POSTAGE	03/04/2020	256.79	03/04/2020
US POSTMASTER	POSTAGE	03/10/2020	35.82	03/10/2020
50-510-2500 EQPMT: SUPPLIES & MAINTENANCE				
DESERT SPLASH OF VERNAL, I	WATER	03/04/2020	8.00	04/02/2020
DESERT SPLASH OF VERNAL, I	WATER	03/17/2020	8.00	04/02/2020
MORT'S CAR WASH, INC.	MONTHLY CAR WASH FEES	02/29/2020	50.80	03/05/2020
NORTH EASTERN UTAH OFFIC	MISC OFFICE SUPPLIES	03/12/2020	51.38	04/09/2020
50-510-2700 UTILITIES				
ROCKY MOUNTAIN POWER	PRESSURE RELIEF VALVE	03/16/2020	60.17	03/25/2020
ROCKY MOUNTAIN POWER	PRESSURE RELIEF VALVE	03/09/2020	9.97	03/25/2020
ROCKY MOUNTAIN POWER	PRESSURE RELIEF VALVE	03/16/2020	55.26	03/25/2020
ROCKY MOUNTAIN POWER	WATER TANK	02/24/2020	19.75	03/05/2020
ROCKY MOUNTAIN POWER	ONE-TIME EFFICIENCY CHARG	02/24/2020	.85-	03/05/2020
ROCKY MOUNTAIN POWER	WATER FILL STATION	03/10/2020	74.40	03/25/2020
ROCKY MOUNTAIN POWER	WATER TANK	02/24/2020	21.48	03/05/2020
ROCKY MOUNTAIN POWER	PUMPING STATION	03/11/2020	28.46	03/25/2020
ROCKY MOUNTAIN POWER	MAINTENANCE YARD	02/25/2020	90.36	03/05/2020
ROCKY MOUNTAIN POWER	ONE-TIME EFFICIENCY CHARG	02/25/2020	5.18-	03/05/2020
50-510-2800 TELEPHONE				
STRATA NETWORKS	MONTHLY CELL PHONE SERVI	02/29/2020	343.85	03/12/2020
50-510-3000 TREATED WATER COST				
UINTAH WATER CONSERVANC	TREATED WATER COSTS-MON	03/09/2020	39,961.90	03/19/2020
UINTAH WATER CONSERVANC	RESERVE	03/09/2020	1,816.45	03/19/2020
50-510-4503 WATER DEPOSIT INTEREST				
APONTE, LIZZETEE	INTEREST	02/19/2020	1.06	03/05/2020
BRIGHTON, RACHEL	INTEREST	02/18/2020	.20	03/05/2020
SFREDDO, NICOLE	INTEREST	02/06/2020	.38	03/05/2020
WERNER, WHITNEY & MAYETH	INTEREST	02/28/2020	.14	03/05/2020
50-510-4504 SPECIAL WATER SUPPLIES				
ASHLEY VALLEY WATER & SE	MONTHLY WATER SERVICE	02/28/2020	88.65	03/05/2020
BRODY CHEMICAL COMP INC.	CONCRETE CLEANER/SQUEEG	03/04/2020	206.70	03/12/2020
CED-VERNAL	REPAIRS FOR WATER DEPT	02/19/2020	75.15	04/09/2020
DETROIT INDUSTRIAL TOOL	NITRILE GLOVE	02/25/2020	127.44	03/12/2020
GOLDSTAR PRODUCTS INC	MARKING PAINT	02/04/2020	1,647.05	03/12/2020
MOUNTAINLAND SUPPLY CO	CLA-VAL CONTROLLER	03/10/2020	4,248.41	04/30/2020
NATIONAL RURAL WATER ASS	ANNUAL MEMBERSHIP DUES	02/01/2020	49.00	03/12/2020
SIMPER SUPPLY COMPANY	SAFETY GLASSES	02/24/2020	71.63	03/12/2020
STANDARD PLUMBING SUPPLY	ADAPTER/INSERTS	12/12/2019	786.36	03/12/2020
STANDARD PLUMBING SUPPLY	INSERTS	12/17/2019	209.80	03/12/2020
STANDARD PLUMBING SUPPLY	ADAPTER	02/17/2020	468.78	03/12/2020
STANDARD PLUMBING SUPPLY	FILES	03/09/2020	22.98	03/12/2020
WAL-MART COMMUNITY BRC	SUPPLIES	02/28/2020	112.30	03/25/2020
50-510-4535 BLUE STAKES				
BLUE STAKES OF UTAH UTILIT	MONTHLY BLUE STAKES FEES	02/29/2020	43.85	03/05/2020
50-510-4550 SOFTWARE UPGRADES				
FLOWPOINT ENVIRONMENTAL	SOFTWARE MAINTENANCE	01/28/2020	795.00	03/12/2020
50-510-5501 WATER MASTER PLAN UPDATE				
CRS CONSULTING ENGINEERS	19-20 WATER MASTER PLAN	02/03/2020	8,930.00	03/05/2020
CRS CONSULTING ENGINEERS	19-20 WATER MASTER PLAN	03/06/2020	13,620.00	03/19/2020
Total WATER DEPARTMENT:			76,509.32	

SEWER DEPARTMENT

Vendor Name	Description	Invoice Date	Net Invoice Amount	Date Paid
50-520-2100 BOOKS, SUBSCRIPT, MEMBERSHIPS				
RURAL WATER ASSOCIATION	RWAU MEMBERSHIP DUES	01/03/2020	685.00	03/12/2020
50-520-2400 OFFICE EXP, SUPPLIES, POSTAGE				
MANSFIELD PRINTING INC.	UTILITY BILLS/LATE NOTICE BL	01/23/2020	697.66	03/19/2020
US POSTMASTER	WATER BILLS	03/04/2020	256.78	03/04/2020
US POSTMASTER	WATER BILLS	03/10/2020	35.81	03/10/2020
50-520-2500 EQPMT: SUPPLIES & MAINTENANCE				
NORTH EASTERN UTAH OFFIC	MISC OFFICE SUPPLIES	03/12/2020	20.56	04/09/2020
50-520-3100 PROFESSIONAL SERVICES				
CRS CONSULTING ENGINEERS	WATER ENGINEERING	02/07/2020	480.00	03/05/2020
50-520-4514 SPECIAL SEWER SUPPLIES				
BRODY CHEMICAL COMP INC.	CONCRETE CLEANER/SQUEEG	03/04/2020	206.69	03/12/2020
DETROIT INDUSTRIAL TOOL	NITRILE GLOVES	02/25/2020	127.44	03/12/2020
GOLDSTAR PRODUCTS INC	MARKING PAINT	02/04/2020	1,647.05	03/12/2020
MOUNTAIN AM CREDIT UNION	STEEL TOE MUCK BOOTS	01/24/2020	150.94	
SIMPER SUPPLY COMPANY	SAFETY GLASSES	02/20/2020	68.12	03/12/2020
50-520-4517 SEWER MANAGEMENT BOARD M & O				
ASHLEY VALLEY SEWER MANA	MONTHLY MAINT & OPERATIO	02/29/2020	78,694.58	03/05/2020
50-520-4521 UNIFORMS				
MOUNTAIN AM CREDIT UNION	STEEL TOE BOOTS TE	01/24/2020	150.94-	
50-520-5503 REHABILITATE SEWER LINES				
CRS CONSULTING ENGINEERS	ENGINEERING FOR SEWER RE	03/06/2020	13,899.50	03/12/2020
Total SEWER DEPARTMENT:			96,819.19	
SOLID WASTE DEPARTMENT				
50-570-2400 OFFICE EXP, SUPPLIES, POSTAGE				
MANSFIELD PRINTING INC.	UTILITY BILLS/LATE NOTICE BL	01/23/2020	697.67	03/19/2020
US POSTMASTER	SECTION 2	03/04/2020	256.79	03/04/2020
US POSTMASTER	SECTION 2	03/10/2020	35.82	03/10/2020
50-570-3100 PROFESSIONAL SERVICES				
G & H GARBAGE SERVICE	RESIDENTIAL GARBAGE	02/29/2020	28,855.45	03/05/2020
G & H GARBAGE SERVICE	CANS	02/29/2020	3,369.24	03/05/2020
50-570-4531 RECYCLING PROGRAM EXPENSE				
VERNAL AREA CHAMBER OF C	RECYCLING FEBRUARY	02/14/2020	500.00	03/12/2020
VERNAL AREA CHAMBER OF C	RECYCLING MARCH	03/11/2020	500.00	03/25/2020
50-570-4535 RECYCLOPS EXPENSE				
RECYCLOPS	RESIDENTIAL RECYCLING	02/29/2020	178.50	03/05/2020
Total SOLID WASTE DEPARTMENT:			34,393.47	
Total VERNAL CITY UTILITIES FUND:			208,077.42	
PAYROLL FUND				
64-2222000 STATE WITHHOLDING PAYABLE				
UTAH STATE TAX COMMISSIO	EMPLOYEE STATE W/H TAXES	03/31/2020	13,510.00	04/16/2020
64-2224000 HEALTH INSURANCE PAYABLE				
OPTICARE OF UTAH	EMPLOYEE OPTIC PREMIUM	03/01/2020	1,147.79	03/12/2020
PUBLIC EMPLOYEE HEALTH P	EMPLOYEES DENTAL	02/20/2020	8,646.74	03/05/2020
PUBLIC EMPLOYEE HEALTH P	EMPLOYEE LIFE INS	02/20/2020	2,797.10	03/05/2020
64-2225000 COLONIAL INSURANCE PAYABLE				
COLONIAL SUPPLEMENTAL IN	BCN E9846924 EMPLOYEE INS	03/01/2020	243.68	03/05/2020
COLONIAL SUPPLEMENTAL IN	BCN E9846924 EMPLOYEE INS	03/15/2020	243.68	03/19/2020

Vendor Name	Description	Invoice Date	Net Invoice Amount	Date Paid
64-2226000 PREPAID LEGAL SERVICES PAYABLE				
LEGAL SHIELD	MONTHLY PREPAID LEGAL W/	03/01/2020	276.15	03/19/2020
64-2227000 VCE-125 PLAN PAYABLE				
VERNAL CITY EMPLOYEES	EMPLOYEES 125 MEDICAL W/H	03/01/2020	367.15	03/05/2020
VERNAL CITY EMPLOYEES	EMPLOYEES 125 MEDICAL W/H	03/15/2020	367.15	03/19/2020
64-2229000 STATE INSURANCE FUND PAYABLE				
UTAH LOCAL GOVERNMENT T	MONTHLY WORKERS COMP P	01/10/2020	4,431.50	03/12/2020
UTAH LOCAL GOVERNMENT T	MONTHLY WORKERS COMP P	02/10/2020	4,431.50	03/12/2020
UTAH LOCAL GOVERNMENT T	MONTHLY WORKERS COMP P	03/10/2020	4,431.50	03/25/2020
64-2230000 HEALTH INSURANCE PAYABLE VRI				
CURALINC, LLC	EAP A/c 01427	03/02/2020	474.30	03/05/2020
64-2231000 ANYTIME FITNESS DEDUCTION				
ANYTIME FITNESS	ANYTIME FITNESS	03/01/2020	150.00	03/19/2020
64-2233000 LONG TERM DISABILITY PAYABLE				
PEHP LTD PROGRAM	LONG TERM DISABILITY	03/01/2020	666.27	03/05/2020
PEHP LTD PROGRAM	LONG TERM DISABILITY	03/15/2020	690.15	03/19/2020
64-2235000 GARNISHEE PAYABLE				
EDWIN B. PARRY	GARNISHMENT	03/01/2020	216.51	03/05/2020
EDWIN B. PARRY	GARNISHMENT	03/15/2020	216.51	03/19/2020
GC SERVICES, L.P.	GARNISHMENT	03/01/2020	50.00	03/05/2020
GC SERVICES, L.P.	GARNISHMENT	03/15/2020	50.00	03/19/2020
64-2236000 TRANS AMERICA				
TRANS AMERICA	TRANS AMER EMP W/H	03/01/2020	239.00	03/19/2020
64-2238000 RETIREMENT PAYABLE ICMA 401				
ICMA RETIREMENT TRUST #10	EMPLOYER 401(a) CONTRIBUTI	03/01/2020	3,078.28	03/05/2020
ICMA RETIREMENT TRUST #10	EMPLOYER 401(a) CONTRIBUTI	03/15/2020	2,976.68	03/19/2020
64-2239000 RETIREMENT PAYABLE ICMA 457				
ICMA RETIREMENT TRUST #30	EMPLOYEE 457(b) CONTRIBUTI	03/01/2020	1,180.77	03/05/2020
ICMA RETIREMENT TRUST #30	EMPLOYEE 457(b) CONTRIBUTI	03/15/2020	1,180.77	03/19/2020
64-2240000 FITNESS 219 PAYABLE				
FITNESS 219	FITNESS 219 EMPLOYEE W/H	03/01/2020	132.44	03/19/2020
64-2241000 WARRIOR WAREHOUSE W/H				
WARRIORS WAREHOUSE	EMPLOYEE WARRIOR WAREH	03/01/2020	35.00	03/19/2020
64-2242000 CHILD SUPPORT PAYABLE				
CHILD SUPPORT SERVICES	CHILD SUPPORT PAYROLL W/H	03/01/2020	197.31	03/05/2020
CHILD SUPPORT SERVICES	CHILD SUPPORT PAYROLL W/H	03/01/2020	249.69	03/05/2020
CHILD SUPPORT SERVICES	CHILD SUPPORT PAYROLL W/H	03/01/2020	222.46	03/05/2020
CHILD SUPPORT SERVICES	CHILD SUPPORT PAYROLL W/H	03/15/2020	197.31	03/19/2020
CHILD SUPPORT SERVICES	CHILD SUPPORT PAYROLL W/H	03/15/2020	249.69	03/19/2020
CHILD SUPPORT SERVICES	CHILD SUPPORT PAYROLL W/H	03/15/2020	222.46	03/19/2020
MONTANA CSED SDU	CHILD SUPPORT PAYROLL W/H	03/01/2020	240.46	03/05/2020
MONTANA CSED SDU	CHILD SUPPORT PAYROLL W/H	03/15/2020	240.46	03/19/2020
64-2244000 UTILITY BILL P/R DED PAYABLE				
VERNAL CITY UTILITIES	EMPLOYEE UTILITIES W/H	03/01/2020	582.20	03/19/2020
64-2246000 UINTAH REC. WITHOLDING				
UINTAH RECREATION DISTRIC	EMPLOYEE UINTAH REC W/H	03/01/2020	708.18	03/19/2020
Total :			55,340.84	
Total PAYROLL FUND:			55,340.84	

TRUST AND AGENCY FUND

Vendor Name	Description	Invoice Date	Net Invoice Amount	Date Paid
71-2971000 RESERVED COURT TRUST FUNDS				
BASIN BEST APARTMENETS	171000313 - RESTITUTION	03/24/2020	100.00	03/25/2020
[redacted]	191000497-RESTITUTION	03/03/2020	25.00	03/05/2020
	1850001053-RESTITUTION	03/03/2020	100.00	03/05/2020
	181000064-REFUND	03/10/2020	680.00	03/11/2020
	191000372-RESTITUTION	03/17/2020	60.00	03/19/2020
JONES PAINT & GLASS	181000523-RESTITUTION	03/10/2020	202.44	03/11/2020
[redacted]	RESTITUTION - 191000147	03/03/2020	2,178.25	03/05/2020
SPORTSMANS WAREHOUSE	191000115-RESTITUTION	03/24/2020	6.37	03/25/2020
THE MAVERICK STORE	RESTITUTION-161000491	03/24/2020	30.00	03/25/2020
UINTAH COUNTY ANIMAL SHEL	RESTITUTION - 181000296	03/10/2020	100.00	03/11/2020
USA CASH SERVICES-SMALL C	REFUND-188000037	03/03/2020	400.00	03/05/2020
VERNAL CITY CORPORATION	BAIL FORFEITED FROM TRUST	03/03/2020	647.73	03/05/2020
VERNAL CITY CORPORATION	BAIL FORFEITED FROM TRUST	03/10/2020	1,897.26	03/11/2020
VERNAL CITY CORPORATION	BAIL FORFEITED FROM TRUST	03/17/2020	787.00	03/19/2020
VERNAL CITY CORPORATION	181000131-RESTITUTION	03/03/2020	50.00	03/05/2020
VERNAL CITY POLICE DEPART	RESTITUTION - 181000348	03/03/2020	25.00	03/05/2020
VERNAL CITY POLICE DEPART	RESTITUTION - 191000115	03/24/2020	18.63	03/25/2020
WALMART ASSET PROTECTIO	191000377-RESTITUTION	03/03/2020	25.00	03/05/2020
WALMART ASSET PROTECTIO	191000384-RESTITUTION	03/03/2020	51.08	03/05/2020
WALMART ASSET PROTECTIO	191000393-RESTITUTION	03/03/2020	7.58	03/05/2020
WALMART ASSET PROTECTIO	191000493-RESTITUTION	03/03/2020	82.60	03/05/2020
[redacted]	191000372-REFUND	03/17/2020	220.00	03/19/2020
Total :			7,693.94	
Total TRUST AND AGENCY FUND:			7,693.94	
Grand Totals:			449,575.77	

Report Criteria:
Invoices with totals above $0.00 included.
Paid and unpaid invoices included.

April 2020 Building Permit Log

BP#	Date	Use	PlatNo	Building Address	Owner / Business	Bldg Fee	Bldg Fine	Plan Chk	State	Subtotal	Meter	Water	Sewer	Total	Valuation	Fire	Misc.	
2008531	04/02/2020	Demolition	05 030 0049	51 South 300 East Vernal Valley Lodging	Vernal Valley Lodging 3, LLC	$0.00	$0.00	$0.00	$0.00	**$0.00**	$0.00	$0.00	$0.00	**$0.00**	$20,000.00			
2008523	04/03/2020	Buisiness Offices	05 014 0011	10 South 1000 West	Brady Thompson	$89.00	$0.00	$44.50	$0.89	**$134.39**	$0.00	$0.00	$0.00	**$134.37**	$4,080.00			
2008527	04/03/2020	Roof	05 021 0009	498 North 200 West	Gilbert Kynaston	$24.75	$0.00	$0.00	$0.25	**$25.00**	$0.00	$0.00	$0.00	**$25.00**	$5,410.00			
2008532	04/03/2020	Sign	05 019 0060	200 East 100 North Uintah County	Uintah County	$0.00	$0.00	$0.00	$6.43	**$6.43**	$0.00	$0.00	$0.00	**$6.43**	$60,000.00			
2008526	04/09/2020	Sign	05 014 0015	872 West Main Vernal Urgent Care	Vernal Urgent Care	$229.63	$0.00	$114.82	$2.30	**$346.75**	$0.00	$0.00	$0.00	**$346.75**	$15,330.00			
1908446	04/13/2020	Rebuild from fire damage	05 031 0070	166 East 200 South	Chad Thompson	$577.00	$0.00	$0.00	$5.77	**$582.77**	$0.00	$0.00	$0.00	**$582.77**	$50,000.00			
2008535	04/16/2020	Demolition and Remodel of Kitchen & Bathroom	05 025 0029	168 South 200 West	Elaine Hassinger	$163.00	$0.00	$0.00	$1.63	**$164.63**	$0.00	$0.00	$0.00	**$164.63**	$10,000.00			
2008534	04/17/2020	Gas line and meter	05 003 0037	209 North 800 West	LJ and Whitney Jackson	$33.00	$0.00	$0.00	$0.33	**$33.33**	$0.00	$0.00	$0.00	**$33.33**	$900.00			
2008536	04/17/2020	Siding	05 051 0005	410 East 500 South	Herbert and Chekie Jensen	$24.75	$0.00	$0.00	$0.25	**$25.00**	$0.00	$0.00	$0.00	**$25.00**	$10,000.00			
2008533	04/20/2020	Re-roof	05 016 0001	638 West 250 South	Carol Judd	$24.75	$0.00	$0.00	$0.25	**$25.00**	$0.00	$0.00	$0.00	**$25.00**	$5,000.00			
1908477	04/27/2020	Remodel	05 014 0015	872 West Main Vernal Medical Office	D Block LLC	$4,130.00	$0.00	$2,684.50	$41.30	**$6,855.80**	$0.00	$0.00	$0.00	**$7,171.80**	$800,000.00	$ 305.00	$ 11.00	
1908385	04/28/2020	Remodel	05 030 0049	51 South 300 East Vernal Valley Lodging	Vernal Valley Lodging 3, LLC	$3,917.50	$0.00	$2,546.38	$39.18	**$6,503.06**	$0.00	$0.00	$0.00	**$6,920.66**	$750,000.00	$ 417.60	$ 37.60	
2008538	04/28/2020	Roof	05 032 0117	58 East Wasatch Avenue	Heather Barlow	$24.75	$0.00	$0.00	$0.25	**$25.00**	$0.00	$0.00	$0.00	**$25.00**	$4,900.00			
2008539	04/30/2020	Electrical	05 023 0044	371 West 200 North	Mitch Collett	$24.75	$0.00	$0.00	$0.25	**$25.00**	$0.00	$0.00	$0.00	**$25.00**	$500.00			
TOTALS						**$9,262.88**	**$0.00**	**$5,390.20**	**$99.08**	**$14,752.16**	**$0.00**	**$0.00**	**$0.00**	**$15,485.74**	**$1,736,120.00**	**$722.60**	**$48.60**	

Business Name	Location	License Description
4 HALLS ENTERPRISES, DBA BEEHI	540 SOUTH 2050 WEST	ELDERLY ASSISTED LIVING
BUCKSKIN LADY LEATHERS	74 EAST MAIN ST #4	MFG LEATHER GOODS
DELTA FITNESS	145 WEST MAIN ST	GYM
FLORES LAWN CARE	130 SOUTH 1500 WEST #28	LAWN CARE
JENKIN'S TIRES AND WHEELS, INC	650 EAST MAIN STREET	RESALE TIRES AND AUTOMOTIVE SHOP
VERNAL LA CABANA RESTAURANT, I	120 EAST MAIN ST	RESTAURANT
WEST USA REALTY SPECIALISTS IN	1010 NORTH VERNAL AVE	WEDDINGS, EVENTS. LIMO SERVICES

Council 4/20

VERNAL CITY JUSTICE COURT

MONTH	COLLECTED	#103505301	#103404111	#103505300
JULY 2019	$41,791.55	$13,864.13	$570.00	$27,927.42
AUGUST 2019	$48,622.82	$16,882.84	$925.00	$31,739.98
SEPTEMBER 2019	$33,742.94	$11,189.02	$825.00	$22,553.92
OCTOBER 2019	$39,365.83	$12,416.34	$1,055.00	$26,949.49
NOVEMBER 2019	$39,728.68	$15,086.63	$400.00	$24,642.05
DECEMBER 2019	$42,411.89	$14,703.86	$240.00	$27,708.03
JANUARY 2020	$36,801.52	$12,190.61	$310.00	$24,610.91
FEBRUARY 2020	$42,091.13	$16,010.94	$755.00	$26,080.19
MARCH 2020	$31,590.52	$10,831.70	$160.00	$20,758.82
APRIL 2020	$28,484.77	$9,416.86	$50.00	$19,067.91
MAY 2020				
JUNE 2020				
2019-2020 YTD	$384,631.65	$132,592.93	$5,290.00	$252,038.72
APRIL 2019	$46,913.77	$16,547.69	$880.00	$30,366.08
YEAR 2018-2019	$511,474.94	$177,254.61	$5,125.00	$334,220.33
YEAR 2017-2018	$468,877.49	$157,484.56	$9,765.00	$311,392.93
YEAR 2016-2017	$447,625.33	$138,546.86	$15,775.00	$309,078.38
YEAR 2015-2016	$497,274.55	$148,155.27	$25,085.00	$349,119.28
YEAR 2014-2015	$630,956.35	$189,533.91	$23,180.00	$441,422.44
YEAR 2013-2014	$674,040.68	$201,017.33	$21,055.00	$473,023.34
YEAR 2012-2013	$555,848.92	$182,441.09	$23,820.00	$373,407.83
YEAR 2011-2012	$563,398.58	$186,848.28	$33,480.00	$410,030.30
YEAR 2010-2011	$464,796.56	$159,538.41	$31,455.00	$336,713.15
YEAR 2009-2010	$502,115.48	$154,190.09	$29,891.48	$354,805.39
YEAR 2008-2009	$685,587.55	$213,630.34	$20,315.00	$471,957.24
YEAR 2007-2008	$806,169.76	$257,685.49	$13,395.00	$548,484.27
YEAR 2006-2007	$644,441.24	$200,687.22	$14,775.00	$428,979.02
YEAR 2005-2006	$518,994.34	$162,514.02	$16,680.00	$339,888.22
YEAR 2004-2005	$332,550.27	$98,896.57	$14,430.00	$219,223.70
YEAR 2003-2004	$315,711.36	$78,066.64	$14,116.00	$223,528.72
YEAR 2002-2003	$301,718.95	$80,874.36	$20,065.00	$200,779.59
YEAR 2001-2002	$322,771.33	$87,407.37	$15,793.00	$219,571.20
YEAR 2000-2001	$313,733.75	$83,351.58	$11,277.00	$219,105.17
YEAR 1999-2000	$280,087.60	$78,542.97	$8,978.00	$192,166.63
YEAR 1998-1999	$270,219.00	$76,183.79	$7,540.00	$186,495.21
YEAR 1997-1998	$289,037.02	$77,169.77	$8,984.00	$202,883.25
YEAR 1996-1997	$231,521.75	$55,405.73	$9,749.00	$167,997.02

Council 4/19

VERNAL CITY JUSTICE COURT

MONTH	COLLECTED	#103505301	#103404111	#103505300
JULY 2018	$42,367.98	$13,748.61	$450.00	$28,619.37
AUGUST 2018	$42,479.56	$14,712.16	$340.00	$27,767.40
SEPTEMBER 2018	$45,062.20	$17,172.86	$580.00	$27,889.34
OCTOBER 2018	$42,268.86	$14,891.14	$655.00	$27,377.72
NOVEMBER 2018	$38,165.83	$13,604.71	$180.00	$24,561.12
DECEMBER 2018	$38,078.71	$13,618.73	$150.00	$24,459.98
JANUARY 2019	$38,494.99	$11,738.22	$690.00	$26,756.77
FEBRUARY 2019	$43,032.37	$15,372.83	$150.00	$27,659.54
MARCH 2019	$53,551.56	$19,392.83	$440.00	$34,158.73
APRIL 2019	$46,913.77	$16,547.69	$880.00	$30,366.08
MAY 2019				
JUNE 2019				
2018-2019 YTD	$430,415.83	$150,799.78	$4,515.00	$279,616.05
APRIL 2018	$37,881.86	$13,049.17	$1,175.00	$24,832.69
YEAR 2017-2018	$468,877.49	$157,484.56	$9,765.00	$311,392.93
YEAR 2016-2017	$447,625.33	$138,546.86	$15,775.00	$309,078.38
YEAR 2015-2016	$497,274.55	$148,155.27	$25,085.00	$349,119.28
YEAR 2014-2015	$630,956.35	$189,533.91	$23,180.00	$441,422.44
YEAR 2013-2014	$674,040.68	$201,017.33	$21,055.00	$473,023.34
YEAR 2012-2013	$555,848.92	$182,441.09	$23,820.00	$373,407.83
YEAR 2011-2012	$563,398.58	$186,848.28	$33,480.00	$410,030.30
YEAR 2010-2011	$464,796.56	$159,538.41	$31,455.00	$336,713.15
YEAR 2009-2010	$502,115.48	$154,190.09	$29,891.48	$354,805.39
YEAR 2008-2009	$685,587.55	$213,630.34	$20,315.00	$471,957.24
YEAR 2007-2008	$806,169.76	$257,685.49	$13,395.00	$548,484.27
YEAR 2006-2007	$644,441.24	$200,687.22	$14,775.00	$428,979.02
YEAR 2005-2006	$518,994.34	$162,514.02	$16,680.00	$339,888.22
YEAR 2004-2005	$332,550.27	$98,896.57	$14,430.00	$219,223.70
YEAR 2003-2004	$315,711.36	$78,066.64	$14,116.00	$223,528.72
YEAR 2002-2003	$301,718.95	$80,874.36	$20,065.00	$200,779.59
YEAR 2001-2002	$322,771.33	$87,407.37	$15,793.00	$219,571.20
YEAR 2000-2001	$313,733.75	$83,351.58	$11,277.00	$219,105.17
YEAR 1999-2000	$280,087.60	$78,542.97	$8,978.00	$192,166.63
YEAR 1998-1999	$270,219.00	$76,183.79	$7,540.00	$186,495.21
YEAR 1997-1998	$289,037.02	$77,169.77	$8,984.00	$202,883.25
YEAR 1996-1997	$231,521.75	$55,405.73	$9,749.00	$167,997.02

Council 4/20

CHARGES FILE BY AGENCIES
JULY 2019 - JUNE 2020

	VCPD	UHP	UCSO	NCPD	DWR	DCSO	RCPD	VCFD	VCCORP
JULY	178	52	8	2					
AUGUST	124	49	12						
SEPTEMBER	144	45	6	1					
OCTOBER	199	48	4	1					
NOVEMBER	154	56	6	1					
DECEMBER	148	39	8	1					
JANUARY	115	22	5	1					
FEBRUARY	135	38	4	2					
MARCH	114	20	5						
APRIL	62	1	2						
MAY									
JUNE									
YTD 2019-2020									

VERNAL CITY INVESTMENT REPORT

Period Ending April 30, 2020

Interest % Rate		Name	PTIF Account	Invest. Amount	Type Invest.	Bank
1.4201%		Public Treasurer's Investment	520	1,829,884.86	pool	UT St. Treasurer
1.4201%		Emer. Repair & Replace / Water	952	544,163.28	pool	UT St. Treasurer
1.4202%		Special Imp. Guarantee Fund/Streets	982	372,763.77	pool	UT St. Treasurer
1.4201%		Water Fund Pooled Account	1904	2,886,305.39	pool	UT St. Treasurer
1.4202%		Equipment Fund	1905	596,703.80	pool	UT St. Treasurer
1.4201%		U.B.N.S.F.	817	181,779.94	pool	UT St. Treasurer
1.4202%		Municipal Building Fund	3534	1,746,781.66	pool	UT St. Treasurer
1.4201%		Storm Drain Fund	3535	144,402.95	pool	UT St. Treasurer
1.4201%		Green Space Fund	3537	145,848.51	pool	UT St. Treasurer
1.4202%		Street Construction Fund	3538	219,123.14	pool	UT St. Treasurer
1.4201%		Parking Lot Fund	4166	163,859.76	pool	UT St. Treasurer
1.4201%		Emergency Prepardness	4513	79,887.58	pool	UT St. Treasurer
1.4201%		Esc Sewer Bonds	7711	364,881.40	pool	UT St. Treasurer
1.6944%		Storm Drain Escrow		40,743.52		Zions (2009B 9010013)
1.6946%		Debt Svc Storm Water		37,853.23		Zions (2009B 9010013A)

TOTAL $ 9,354,982.79

VERNAL CITY CORPORATION
BALANCE SHEET
APRIL 30, 2020

GENERAL FUND

	ASSETS			
10-1112000	CASH IN BANK: MOUNTAIN AM		(94,203.13)	
10-1113000	CASH- XPRESS DEPOSIT ACCOUNT		75,707.88	
10-1131000	PETTY CASH		900.00	
10-1151000	POOLED INVESTMENT		1,829,884.86	
10-1152000	INVESTMENT: MOUNTAIN AMERICA		784.32	
10-1152500	INVESTMENT: MACU - CONFISCATED		8,375.21	
10-1158000	INVESTMENT: VICTIM ADVOCATE		6,133.94	
10-1163000	INVEST: PLAN & ZONE ESCROW		102,026.89	
10-1190000	CASH-ALLOC TO OTHER FUNDS		454,153.26	
10-1311000	ACCOUNTS RECEIVABLE		4,455.78	
10-1370000	TRAVEL ROOM TAX REFUND		633.76	
10-1411000	DUE FROM OTHER GOV'T UNITS		103,996.62	
10-1562000	MUN BLDG AUTH: PREPAID RENT		5,000.00	
	TOTAL ASSETS			2,497,849.39
	LIABILITIES AND EQUITY			
	LIABILITIES			
10-2131000	ACCOUNTS PAYABLE		133,744.91	
10-2134000	CONFISCATED FUNDS - PAYABLE		4,314.88	
10-2135000	HOLLY DAYS PREPAID CONTRBTION		9,100.00	
10-2136000	ESCROW PAYABLE:PLAN & ZONE		102,026.89	
10-2150000	DEPOSIT - WHITE ACADEMY		4,500.00	
10-2425000	B.P. STATE SURCHARGE		99.08	
	TOTAL LIABILITIES			253,785.76
	FUND EQUITY			
10-2977100	RESTRICTED FUND : HIGHWAY TAX		55,146.25	
10-2978000	COMMITTED FUND - COMP. ABSENCE		280,459.11	
	UNAPPROPRIATED FUND BALANCE:			
10-2980000	BEGINNING OF YEAR	2,860,038.78		
	REVENUE OVER EXPENDITURES - YTD	(1,266,927.78)		
	BALANCE - CURRENT DATE		1,593,111.00	
	TOTAL FUND EQUITY			1,928,716.36
	TOTAL LIABILITIES AND EQUITY			2,182,502.12

VERNAL CITY CORPORATION
REVENUES WITH COMPARISON TO BUDGET
FOR THE 10 MONTHS ENDING APRIL 30, 2020

GENERAL FUND

		PERIOD ACTUAL	YTD ACTUAL	BUDGET	UNEARNED	PCNT
	TAXES					
10-310-1100	GEN'L PROPERTY TAXES-CURRENT	.00	388,490.08	398,708.00	10,217.92	97.4
10-310-1200	DELINQUENT PRIOR YEARS' TAXES	.00	12,973.17	17,030.00	4,056.83	76.2
10-310-1300	GENERAL SALES AND USE TAXES	223,548.04	2,264,726.45	3,600,000.00	1,335,273.55	62.9
10-310-1301	CITY OPTION TAX	47,250.29	503,907.31	870,000.00	366,092.69	57.9
10-310-1303	CNTY/HWY PUBLIC TRT TAX- L(A2)	20,348.93	46,245.03	.00	(46,245.03)	.0
10-310-1310	INNKEEPERS ROOM TAX	1,834.73	61,475.09	76,000.00	14,524.91	80.9
10-310-1320	HIGHWAY OPTION TAX	70,939.08	756,923.51	1,315,000.00	558,076.49	57.6
10-310-1410	FRANCHISE TAX - ROCKY MNT PWR	41,128.25	415,260.24	560,000.00	144,739.76	74.2
10-310-1420	FRANCHISE TAX: QUESTAR	25,213.31	178,254.77	220,000.00	41,745.23	81.0
10-310-1432	MUNICIPAL TELECOMM TAX	15,514.84	125,554.74	210,000.00	84,445.26	59.8
10-310-1440	FRANCHISE TAX - TV STRATA	.00	21,682.34	48,000.00	26,317.66	45.2
10-310-1700	FEE-IN-LIEU OF PROPERTY TAXES	.00	21,922.82	30,000.00	8,077.18	73.1
10-310-1900	PENALTY/INTEREST:DELINQENT TAX	.00	1,186.35	1,000.00	(186.35)	118.6
	TOTAL TAXES	445,777.47	4,798,601.90	7,345,738.00	2,547,136.10	65.3
	LICENSES & PERMITS					
10-320-2100	BUSINESS LICENSES	2,787.25	63,873.40	68,000.00	4,126.60	93.9
10-320-2200	BUILDING PERMITS	9,262.88	48,134.42	50,000.00	1,865.58	96.3
10-320-2240	ENCROACHMENT PERMIT	180.00	2,060.00	3,000.00	940.00	68.7
10-320-2250	PLAN REVIEW	5,390.20	19,983.50	10,000.00	(9,983.50)	199.8
	TOTAL LICENSES & PERMITS	17,620.33	134,051.32	131,000.00	(3,051.32)	102.3
	INTERGOVERNMENTAL					
10-330-3450	C I B GRANT - MASTER PLAN	.00	.00	15,000.00	15,000.00	.0
10-330-3510	POLICE - G.E.A.R.S.	4,092.53	8,133.71	10,000.00	1,866.29	81.3
10-330-3517	S.A.F.G. - POLICE FORFEITURE	.00	.00	5,000.00	5,000.00	.0
10-330-3519	J.C.A.T. OFFICER REIMBURSEMENT	.00	912.81	5,000.00	4,087.19	18.3
10-330-3520	I.C.A.C. JUSTICE ASST GRANT	.00	5,713.10	8,000.00	2,286.90	71.4
10-330-3523	ST REIMB: ALCH & TOBACO & DUI	.00	1,780.11	.00	(1,780.11)	.0
10-330-3524	SCHOOL RESOURCE OFFICER	.00	26,000.00	26,000.00	.00	100.0
10-330-3527	EXTRADITION EXP REIMBURSEMENT	.00	385.49	500.00	114.51	77.1
10-330-3535	FEDERAL GRANT: V.O.C.A	.00	30,183.50	50,000.00	19,816.50	60.4
10-330-3560	CLASS "C" ROAD FUND ALLOTMENT	.00	299,676.39	475,000.00	175,323.61	63.1
10-330-3580	STATE LIQUOR FUND ALLOTMENT	.00	39,548.60	30,000.00	(9,548.60)	131.8
10-330-3800	IMPACT MITIGATION SSD	.00	6,353.01	8,500.00	2,146.99	74.7
10-330-3805	FIRE DISTRICT REMITTANCE	.00	24,925.35	33,300.00	8,374.65	74.9
10-330-3810	ANIMAL SHELTER REMITTANCE	.00	28,908.37	37,000.00	8,091.63	78.1
10-330-3815	TRANSPORTATION SSD	.00	14,800.00	.00	(14,800.00)	.0
	TOTAL INTERGOVERNMENTAL	4,092.53	487,320.44	703,300.00	215,979.56	69.3

VERNAL CITY CORPORATION
REVENUES WITH COMPARISON TO BUDGET
FOR THE 10 MONTHS ENDING APRIL 30, 2020

GENERAL FUND

		PERIOD ACTUAL	YTD ACTUAL	BUDGET	UNEARNED	PCNT
	CHARGES FOR SERVICES					
10-340-4110	ZONING AND SUBDIVISION FEES	1,610.00	3,900.00	3,000.00	(900.00)	130.0
10-340-4111	COURT COSTS & FEES	50.00	5,290.00	8,000.00	2,710.00	66.1
10-340-4115	CRIMINAL HISTORY REPORT	15.00	1,110.00	1,500.00	390.00	74.0
10-340-4117	FINGER PRINTING- 10 PRINT CARD	.00	2,610.00	3,000.00	390.00	87.0
10-340-4119	SEX OFFENDER FEE	.00	40.00	100.00	60.00	40.0
10-340-4150	SALE OF MAPS AND PUBLICATIONS	.00	25.80	50.00	24.20	51.6
10-340-4210	INSURANCE REPORTS	67.00	881.00	100.00	(781.00)	881.0
10-340-4211	COMMUNITY ROOM - FEE'S	(150.00)	1,080.00	1,000.00	(80.00)	108.0
10-340-4215	EMPLOYEE SAVING PLAN - FEE'S	18.00	182.50	300.00	117.50	60.8
10-340-4311	GRAMA REQUEST	70.80	495.16	1,000.00	504.84	49.5
10-340-4500	LEASE INCOME - OLD CITY BLDG	1,500.00	24,000.00	33,600.00	9,600.00	71.4
10-340-4510	LEASE INCOME - DOWNTOWN	1,050.00	10,500.00	.00	(10,500.00)	.0
10-340-4550	UITILITY INCOME - OLD CITY BLD	272.51	3,721.28	4,000.00	278.72	93.0
10-340-4900	MISCELLANEOUS FEES	428.30	1,853.91	2,000.00	146.09	92.7
	TOTAL CHARGES FOR SERVICES	4,931.61	55,689.65	57,650.00	1,960.35	96.6
	FINES & FORFEITURES					
10-350-5200	FORFEITURES: DISTRICT COURT	.00	.00	100.00	100.00	.0
10-350-5300	JUSTICE COURT FINES	20,083.37	247,376.37	310,000.00	62,623.63	79.8
10-350-5301	JUSTICE COURT STATE SURCHARGE	9,416.86	132,592.93	155,000.00	22,407.07	85.5
	TOTAL FINES & FORFEITURES	29,500.23	379,969.30	465,100.00	85,130.70	81.7
	MISCELLANEOUS SERVICES					
10-360-6100	INTEREST EARNINGS	1,966.86	34,305.28	40,000.00	5,694.72	85.8
10-360-6306	ULGT - TAP	.00	.00	5,000.00	5,000.00	.0
10-360-6310	INSURANCE REIMB. PROCEEDS	.00	5,956.78	.00	(5,956.78)	.0
10-360-6410	SALE OF SURPLUS PROPERTY	1.00	12,111.56	.00	(12,111.56)	.0
10-360-6910	MISCELLANEOUS REVENUE	15.00	16,210.62	1,000.00	(15,210.62)	1621.1
	TOTAL MISCELLANEOUS SERVICES	1,982.86	68,584.24	46,000.00	(22,584.24)	149.1

VERNAL CITY CORPORATION
REVENUES WITH COMPARISON TO BUDGET
FOR THE 10 MONTHS ENDING APRIL 30, 2020

GENERAL FUND

		PERIOD ACTUAL	YTD ACTUAL	BUDGET	UNEARNED	PCNT
	CONTRIBUTIONS & TRANSFERS					
10-380-8111	WATER ADMIN. COST ALLOCATION	50,500.00	505,000.00	606,000.00	101,000.00	83.3
10-380-8112	SEWER ADMIN. COST ALLOCATION	30,000.00	300,000.00	360,000.00	60,000.00	83.3
10-380-8113	SOLID WASTE: ADMIN COST ALLOC	3,000.00	30,000.00	36,000.00	6,000.00	83.3
10-380-8115	MOTOR POOL REIMBURSEMENTS	165.56	4,028.83	3,000.00	(1,028.83)	134.3
10-380-8119	TRANSFER FROM: GRANT/GREEN	.00	.00	5,000.00	5,000.00	.0
10-380-8714	CONTRIBUTION: HOLLY DAYS	.00	59,074.00	55,000.00	(4,074.00)	107.4
10-380-8715	CONTRIBUTION: VICTIMS ADVOCATE	.00	6,120.00	4,000.00	(2,120.00)	153.0
10-380-8790	USE OF BEGINNING FUND BALANCE	.00	.00	380,631.00	380,631.00	.0
	TOTAL CONTRIBUTIONS & TRANSFERS	83,665.56	904,222.83	1,449,631.00	545,408.17	62.4
	TOTAL FUND REVENUE	587,570.59	6,828,439.68	10,198,419.00	3,369,979.32	67.0

VERNAL CITY CORPORATION
EXPENDITURES WITH COMPARISON TO BUDGET
FOR THE 10 MONTHS ENDING APRIL 30, 2020

GENERAL FUND

		PERIOD ACTUAL	YTD ACTUAL	BUDGET	UNEXPENDED	PCNT
	MAYOR & COUNCIL					
10-401-1103	PERM EMPLOYEES/ REG HOURS	3,463.46	38,544.69	45,500.00	6,955.31	84.7
10-401-1313	F I C A	184.78	2,129.29	3,500.00	1,370.71	60.8
10-401-1314	RETIREMENT/CITY FOR EMPLOYEE	639.70	7,036.70	8,500.00	1,463.30	82.8
10-401-1316	MEDICAL INSURANCE	7,843.07	86,185.68	111,000.00	24,814.32	77.6
10-401-1317	WORKERS COMP.	56.16	1,197.75	2,000.00	802.25	59.9
10-401-2100	BOOKS, SUBSCRIPT, MEMBERSHIPS	7,943.27	21,886.54	14,600.00	(7,286.54)	149.9
10-401-2200	PUBLIC NOTICES	80.25	951.25	3,000.00	2,048.75	31.7
10-401-2300	TRAVEL	.00	2,352.18	5,000.00	2,647.82	47.0
10-401-2400	OFFICE EXP, SUPPLIES, POSTAGE	6.83	338.46	1,000.00	661.54	33.9
10-401-3160	ELECTIONS	.00	.00	11,000.00	11,000.00	.0
10-401-3830	YOUTH CITY COUNCIL	.00	2,620.67	2,500.00	(120.67)	104.8
10-401-3840	LOCAL EVENT SPONSORSHIPS	3,000.00	35,019.35	43,750.00	8,730.65	80.0
10-401-3843	VISITOR CENTER	.00	55,000.00	55,000.00	.00	100.0
10-401-3845	HOLLY-DAYS ACTIVITIES	.00	73,733.22	62,000.00	(11,733.22)	118.9
10-401-3850	EMPLOYEE APPRECIATION	.00	2,244.98	2,000.00	(244.98)	112.3
10-401-3851	CHAMBER OF COMMERCE	11,250.00	47,500.00	45,000.00	(2,500.00)	105.6
10-401-3910	SAFETY PROGRAM	1,000.00	4,317.75	6,000.00	1,682.25	72.0
10-401-4600	MISCELLANEOUS SERVICES	152.84	5,989.16	6,000.00	10.84	99.8
10-401-5001	COVID 19 - EXPENSE	1,518.95	1,518.95	.00	(1,518.95)	.0
	TOTAL MAYOR & COUNCIL	37,139.31	388,566.62	427,350.00	38,783.38	90.9
	FINANCE					
10-413-1103	PERM EMPLOYEES/REG HOURS	22,187.95	242,211.85	300,000.00	57,788.15	80.7
10-413-1104	PERM EMPLOYEES/ OT HOURS	.00	.00	1,000.00	1,000.00	.0
10-413-1311	LONG TERM DISABILITY	110.24	1,223.64	2,000.00	776.36	61.2
10-413-1313	F I C A	1,602.06	17,816.91	23,000.00	5,183.09	77.5
10-413-1314	RETIREMENT/CITY FOR EMPLOYEE	3,964.70	44,282.24	55,000.00	10,717.76	80.5
10-413-1316	MEDICAL INSURANCE	6,822.03	68,210.23	85,000.00	16,789.77	80.3
10-413-1317	WORKERS COMP.	134.73	2,910.38	3,500.00	589.62	83.2
10-413-2100	BOOKS, SUBSCRIPT, MEMBERSHIPS	.00	44.00	300.00	256.00	14.7
10-413-2300	TRAVEL	.00	2,450.99	5,700.00	3,249.01	43.0
10-413-2400	OFFICE EXP, SUPPLIES, POSTAGE	163.65	5,138.43	10,000.00	4,861.57	51.4
10-413-2800	TELEPHONE	143.05	1,410.63	1,500.00	89.37	94.0
10-413-3100	PROFESSIONAL SERVICES	.00	35,899.00	35,500.00	(399.00)	101.1
10-413-3610	TRAINING	.00	1,075.00	2,250.00	1,175.00	47.8
10-413-3700	MAINTENANCE AGREEMENTS	.00	130.00	200.00	70.00	65.0
10-413-4550	SOFTWARE & UPGRADE EXPENSE	.00	.00	500.00	500.00	.0
10-413-4610	BANK FEE'S AND CHARGES	(18.00)	.93	1,000.00	999.07	.1
	TOTAL FINANCE	35,110.41	422,804.23	526,450.00	103,645.77	80.3

GENERAL FUND

		PERIOD ACTUAL	YTD ACTUAL	BUDGET	UNEXPENDED	PCNT
	CITY ATTORNEY					
10-414-2100	BOOKS, SUBSCRIPT, MEMBERSHIPS	.00	21.10	3,350.00	3,328.90	.6
10-414-2300	TRAVEL	.00	1,841.61	3,000.00	1,158.39	61.4
10-414-2400	OFFICE EXP, SUPPLIES, POSTAGE	.00	449.90	400.00	(49.90)	112.5
10-414-3100	PROFESSIONAL SERVICES	1,500.00	20,425.00	18,000.00	(2,425.00)	113.5
10-414-3110	PROSECUTION ATTORNEY	6,550.00	65,500.00	83,100.00	17,600.00	78.8
10-414-3120	PUBLIC DEFENDER SERVICES	3,100.00	37,055.00	37,200.00	145.00	99.6
10-414-3150	CONFLICT PROSECUTION	.00	6,457.75	5,000.00	(1,457.75)	129.2
10-414-3160	SPECIAL LEGAL SERVICES	135.00	9,251.81	14,700.00	5,448.19	62.9
	TOTAL CITY ATTORNEY	11,285.00	141,002.17	164,750.00	23,747.83	85.6
	CITY ADMINISTRATION					
10-415-1103	PERM EMPLOYEES/ REG HOURS	13,013.70	178,249.62	221,000.00	42,750.38	80.7
10-415-1104	PERM EMPLOYEES/ OT HOURS	125.60	1,297.85	2,000.00	702.15	64.9
10-415-1311	LONG TERM DISABILITY	40.82	868.92	1,300.00	431.08	66.8
10-415-1313	F I C A	938.03	13,325.72	17,000.00	3,674.28	78.4
10-415-1314	RETIREMENT/CITY FOR EMPLOYEE	2,173.04	33,276.91	41,000.00	7,723.09	81.2
10-415-1316	MEDICAL INSURANCE	3,502.62	35,008.49	38,000.00	2,991.51	92.1
10-415-1317	WORKERS COMP.	120.65	3,282.96	5,000.00	1,717.04	65.7
10-415-2100	BOOKS, SUBSCRIPT, MEMBERSHIPS	.00	4,938.50	4,900.00	(38.50)	100.8
10-415-2200	PUBLIC NOTICES	.00	259.50	700.00	440.50	37.1
10-415-2250	PUBLIC INFORMATION	.00	1,505.00	6,000.00	4,495.00	25.1
10-415-2300	TRAVEL	.00	2,679.32	6,000.00	3,320.68	44.7
10-415-2400	OFFICE EXP, SUPPLIES, POSTAGE	(274.65)	4,590.55	5,000.00	409.45	91.8
10-415-2500	EQPMT: SUPPLIES & MAINTENANCE	.00	304.21	2,000.00	1,695.79	15.2
10-415-2800	TELEPHONE	1,832.95	17,247.81	23,000.00	5,752.19	75.0
10-415-2900	FUEL	30.39	427.91	900.00	472.09	47.6
10-415-4100	INSURANCE PREMIUMS	.00	147,493.88	163,000.00	15,506.12	90.5
10-415-4101	RETIREE MEDICAL INSURANCE	.00	1,986.67	3,800.00	1,813.33	52.3
10-415-4102	HEALTH SAVINGS PLAN	.00	48,445.30	45,000.00	(3,445.30)	107.7
10-415-4110	UNINSURED REPAIRS	.00	3,123.85	4,000.00	876.15	78.1
10-415-4620	PERSONNEL TESTING	190.00	2,071.00	3,000.00	929.00	69.0
	TOTAL CITY ADMINISTRATION	21,693.15	500,383.97	592,600.00	92,216.03	84.4

VERNAL CITY CORPORATION
EXPENDITURES WITH COMPARISON TO BUDGET
FOR THE 10 MONTHS ENDING APRIL 30, 2020

GENERAL FUND

		PERIOD ACTUAL	YTD ACTUAL	BUDGET	UNEXPENDED	PCNT
	GOVERNMENT FACILITIES					
10-416-1103	PERM EMPLOYEES/ REG HOURS	15,613.77	167,041.16	220,000.00	52,958.84	75.9
10-416-1104	PERM EMPLOYEES/ OT HOURS	.00	671.21	1,000.00	328.79	67.1
10-416-1311	LONG TERM DISABILITY	76.81	846.71	1,400.00	553.29	60.5
10-416-1313	F I C A	1,143.33	12,668.99	17,000.00	4,331.01	74.5
10-416-1314	RETIREMENT/CITY FOR EMPLOYEE	2,724.50	30,207.66	41,000.00	10,792.34	73.7
10-416-1316	MEDICAL INSURANCE	5,046.92	48,810.89	68,000.00	19,189.11	71.8
10-416-1317	WORKERS COMP.	252.99	5,373.25	7,000.00	1,626.75	76.8
10-416-2300	TRAVEL	.00	80.75	400.00	319.25	20.2
10-416-2400	OFFICE EXP, SUPPLIES, POSTAGE	.03	.98	100.00	99.02	1.0
10-416-2500	EQPMT: SUPPLIES & MAINTENANCE	52.26	2,378.94	1,500.00	(878.94)	158.6
10-416-2550	TOOLS & WORKING SUPPLIES	.00	243.57	750.00	506.43	32.5
10-416-2600	BLDG & GRNDS: SUPPLIES & MAINT	605.49	14,346.55	29,000.00	14,653.45	49.5
10-416-2650	BLDG: JANITORIAL SUPPLIES	37.78	6,077.46	6,000.00	(77.46)	101.3
10-416-2700	UTILITIES - PUBLIC WORKS	2,691.46	31,418.61	38,000.00	6,581.39	82.7
10-416-2800	TELEPHONE	154.57	1,386.92	2,100.00	713.08	66.0
10-416-2900	FUEL	89.28	2,696.29	2,000.00	(696.29)	134.8
10-416-3100	PROFESSIONAL SERVICES	.00	4,758.92	12,000.00	7,241.08	39.7
10-416-3810	OTHER RENT: MUN BLDG AUTH	6,059.32	72,917.76	90,000.00	17,082.24	81.0
10-416-4521	UNIFORMS	.00	1,718.01	2,300.00	581.99	74.7
10-416-5005	COUNTER TOP - PLANNING / ZONE	.00	3,302.80	.00	(3,302.80)	.0
	TOTAL GOVERNMENT FACILITIES	34,548.51	406,947.43	539,550.00	132,602.57	75.4

GENERAL FUND

		PERIOD ACTUAL	YTD ACTUAL	BUDGET	UNEXPENDED	PCNT
	PLANNING & ZONING DEVELOPMENT					
10-418-1103	PERM EMPLOYEES/ REG HOURS	19,613.61	213,560.36	270,000.00	56,439.64	79.1
10-418-1104	PERM EMPLOYEES/ OT HOURS	.00	118.26	1,500.00	1,381.74	7.9
10-418-1311	LONG TERM DISIBILITY	69.99	795.95	1,500.00	704.05	53.1
10-418-1313	F I C A	1,421.91	15,971.74	22,000.00	6,028.26	72.6
10-418-1314	RETIREMENT/CITY FOR EMPLOYEE	3,510.22	40,124.82	52,000.00	11,875.18	77.2
10-418-1316	MEDICAL INSURANCE	7,473.18	74,778.58	100,000.00	25,221.42	74.8
10-418-1317	WORKERS COMP.	249.50	5,343.79	6,000.00	656.21	89.1
10-418-1318	STATE UNEMPLOYMENT	.00	.00	1,000.00	1,000.00	.0
10-418-2100	BOOKS, SUBSCRIPT, MEMBERSHIPS	.00	459.00	1,700.00	1,241.00	27.0
10-418-2300	TRAVEL	.00	5,087.88	7,250.00	2,162.12	70.2
10-418-2400	OFFICE EXP, SUPPLIES, POSTAGE	12.90	1,252.85	1,500.00	247.15	83.5
10-418-2500	MOTORPOOL	13.00	790.84	3,000.00	2,209.16	26.4
10-418-2550	TOOLS & WORKING SUPPLIES	.00	499.85	500.00	.15	100.0
10-418-2600	EQPMT: SUPPLIES & MAINTENANCE	.00	1,056.11	1,200.00	143.89	88.0
10-418-2800	TELEPHONE	116.22	1,289.67	2,500.00	1,210.33	51.6
10-418-2805	AT&T DATA	117.33	1,141.86	1,300.00	158.14	87.8
10-418-2900	FUEL	51.30	1,227.18	1,800.00	572.82	68.2
10-418-3100	PROFESSIONAL SERVICES	.00	6,480.00	10,000.00	3,520.00	64.8
10-418-3150	PLAN REVIEW	.00	17,902.60	10,000.00	(7,902.60)	179.0
10-418-3610	TRAINING	.00	923.47	7,150.00	6,226.53	12.9
10-418-3611	TRAINING - PLANNING COMMISION	.00	.00	500.00	500.00	.0
10-418-4521	UNIFORMS	37.50	905.02	1,300.00	394.98	69.6
10-418-4550	SOFTWARE & UPGRADE EXPENSE	555.36	3,899.95	4,400.00	500.05	88.6
10-418-5506	GENERAL PLAN UPDATE	.00	.00	30,000.00	30,000.00	.0
	TOTAL PLANNING & ZONING DEVELOPMENT	33,242.02	393,609.78	538,100.00	144,490.22	73.2
	I.T. DEPARTMENT					
10-419-1103	PERM EMPLOYEES/ REG HOURS	5,564.16	59,852.15	72,500.00	12,647.85	82.6
10-419-1104	PERM EMPLOYEES/ OT HOURS	.00	725.76	500.00	(225.76)	145.2
10-419-1311	LONG TERM DISIBILITY	26.18	306.75	500.00	193.25	61.4
10-419-1313	F I C A	403.70	4,521.59	6,000.00	1,478.41	75.4
10-419-1314	RETIREMENT/CITY FOR EMPLOYEE	967.06	11,383.46	13,100.00	1,716.54	86.9
10-419-1316	MEDICAL INSURANCE	1,930.92	19,309.20	23,000.00	3,690.80	84.0
10-419-1317	WORKERS COMP.	6.12	126.61	1,000.00	873.39	12.7
10-419-2100	BOOKS, SUBSCRIPT, MEMBERSHIPS	.00	.00	50.00	50.00	.0
10-419-2300	TRAVEL	.00	113.34	200.00	86.66	56.7
10-419-2400	OFFICE EXP, SUPPLIES, POSTAGE	78.80	838.19	1,000.00	161.81	83.8
10-419-2800	TELEPHONE	23.34	323.74	750.00	426.26	43.2
10-419-3100	PROFESSIONAL SERVICES	189.93	1,899.30	2,400.00	500.70	79.1
10-419-4550	SOFTWARE & UPGRADE EXPENSE	43.23	6,650.24	7,500.00	849.76	88.7
10-419-4560	IT REPLACEMENT PARTS	.00	3,564.93	4,500.00	935.07	79.2
10-419-4570	NETWORK EQPT & MAINTENANCE	.00	1,979.18	2,000.00	20.82	99.0
10-419-4580	WEB SITE	.00	2,268.00	2,500.00	232.00	90.7
10-419-5001	COMPUTER REPLACEMENT PROGRAM	.00	9,021.46	12,000.00	2,978.54	75.2
	TOTAL I.T. DEPARTMENT	9,233.44	122,883.90	149,500.00	26,616.10	82.2

GENERAL FUND

		PERIOD ACTUAL	YTD ACTUAL	BUDGET	UNEXPENDED	PCNT
	JUSTICE COURT					
10-420-1103	PERM EMPLOYEES/ REG HOURS	13,879.96	151,670.69	185,500.00	33,829.31	81.8
10-420-1104	PERM EMPLOYEES/ OT HOURS	.00	.00	1,000.00	1,000.00	.0
10-420-1210	COURT OFFICER WAGES	458.76	39,921.75	60,000.00	20,078.25	66.5
10-420-1311	LONG TERM DISABILITY	69.12	766.69	1,100.00	333.31	69.7
10-420-1313	F I C A	1,029.66	14,154.00	16,000.00	1,846.00	88.5
10-420-1314	RETIREMENT/ CITY FOR EMPLOYEE	2,553.16	28,526.43	35,000.00	6,473.57	81.5
10-420-1316	MEDICAL INSURANCE	5,467.23	60,943.03	62,000.00	1,056.97	98.3
10-420-1317	WORKERS COMP.	95.32	3,206.44	4,000.00	793.56	80.2
10-420-2100	BOOKS, SUBSCRIPT, MEMBERSHIPS	.00	.00	100.00	100.00	.0
10-420-2300	TRAVEL	(75.00)	1,941.57	5,500.00	3,558.43	35.3
10-420-2400	OFFICE EXP, SUPPLIES, POSTAGE	30.50	1,765.17	3,000.00	1,234.83	58.8
10-420-2500	EQPMT: SUPPLIES & MAINTENANCE	.00	83.74	500.00	416.26	16.8
10-420-2800	TELEPHONE	23.39	218.23	800.00	581.77	27.3
10-420-3100	PROFESSIONAL SERVICES	.00	166.50	1,000.00	833.50	16.7
10-420-4500	SPECIAL DEPARTMENTAL SUPPLIES	.00	.00	50.00	50.00	.0
10-420-4510	JURY & WITNESS FEES	.00	3,304.04	2,000.00	(1,304.04)	165.2
	TOTAL JUSTICE COURT	23,532.10	306,668.28	377,550.00	70,881.72	81.2

VERNAL CITY CORPORATION
EXPENDITURES WITH COMPARISON TO BUDGET
FOR THE 10 MONTHS ENDING APRIL 30, 2020

GENERAL FUND

		PERIOD ACTUAL	YTD ACTUAL	BUDGET	UNEXPENDED	PCNT
	POLICE DEPARTMENT					
10-421-1103	PERM EMPLOYEES/ REG HOURS	101,572.97	1,138,202.78	1,475,000.00	336,797.22	77.2
10-421-1104	PERM EMPLOYEES/ OT HOURS	11,012.68	96,085.22	90,000.00	(6,085.22)	106.8
10-421-1215	ALCOHOL PATROL WAGES	.00	29,770.19	35,000.00	5,229.81	85.1
10-421-1311	LONG TERM DISABILITY	414.98	5,004.38	8,600.00	3,595.62	58.2
10-421-1313	F I C A	8,148.74	94,522.00	113,000.00	18,478.00	83.7
10-421-1314	RETIREMENT/ CITY FOR EMPLOYEE	28,545.95	342,577.07	480,000.00	137,422.93	71.4
10-421-1316	MEDICAL INSURANCE	39,577.88	397,136.01	500,000.00	102,863.99	79.4
10-421-1317	WORKERS COMP.	1,662.85	36,617.20	43,500.00	6,882.80	84.2
10-421-1318	STATE UNEMPLOYMENT	.00	.00	5,000.00	5,000.00	.0
10-421-1319	UNIFORM ALLOWANCE	1,567.50	17,745.95	22,450.00	4,704.05	79.1
10-421-2100	BOOKS, SUBSCRIPT, MEMBERSHIPS	.00	723.06	2,900.00	2,176.94	24.9
10-421-2200	PUBLIC NOTICES	.00	.00	100.00	100.00	.0
10-421-2300	TRAVEL	.00	9,095.85	19,000.00	9,904.15	47.9
10-421-2310	STATE REIMBURSED TRAVEL EXPENS	.00	297.72	500.00	202.28	59.5
10-421-2400	OFFICE EXP, SUPPLIES, POSTAGE	643.82	9,582.67	13,000.00	3,417.33	73.7
10-421-2500	EQPMT: SUPPLIES & MAINTENANCE	1,120.30	11,339.54	18,000.00	6,660.46	63.0
10-421-2800	TELEPHONE	890.00	9,100.00	11,000.00	1,900.00	82.7
10-421-2900	FUEL	2,965.00	39,279.44	44,000.00	4,720.56	89.3
10-421-3100	PROFESSIONAL SERVICES	.00	.00	750.00	750.00	.0
10-421-3600	EDUCATION	.00	14,821.81	13,500.00	(1,321.81)	109.8
10-421-3700	MAINTENANCE AGREEMENTS	1,054.46	30,935.17	27,500.00	(3,435.17)	112.5
10-421-3820	CHILD ABUSE PROGRAM	.00	200.00	200.00	.00	100.0
10-421-3822	DARE/NOVA PROGRAM	.00	3,175.43	4,500.00	1,324.57	70.6
10-421-4410	COMMUNITY RELATIONS	.00	445.67	750.00	304.33	59.4
10-421-4510	SPECIAL PUBLIC SAFETY	17.99	5,948.64	11,000.00	5,051.36	54.1
10-421-4513	CANINE EXPENSE	86.99	1,831.32	2,500.00	668.68	73.3
10-421-4701	CITY SHARE: CONS DISPATCH	.00	143,228.00	137,000.00	(6,228.00)	104.6
10-421-4800	VEHICLE LEASE PROGRAM	.00	140,859.99	210,000.00	69,140.01	67.1
10-421-5003	TASERS	.00	3,970.00	4,000.00	30.00	99.3
10-421-5043	FIREARMS AMMUNITION	.00	2,994.41	5,000.00	2,005.59	59.9
10-421-5049	TACTICAL TEAM TRAINING	.00	61.48	1,500.00	1,438.52	4.1
10-421-7001	BEER/ALCOHOL TAX EXPENSE	.00	16,035.00	5,000.00	(11,035.00)	320.7
10-421-7002	I.C.A.C. GRANT	.00	3,256.98	8,000.00	4,743.02	40.7
10-421-7003	S.A.F.G. GRANT	.00	.00	5,000.00	5,000.00	.0
	TOTAL POLICE DEPARTMENT	199,282.11	2,604,842.98	3,317,250.00	712,407.02	78.5

GENERAL FUND

		PERIOD ACTUAL	YTD ACTUAL	BUDGET	UNEXPENDED	PCNT
	FIRE DEPARTMENT					
10-422-1105	PART-TIME EMPLOYEE/ REG HOURS	(4,790.89)	1,781.00	.00	(1,781.00)	.0
10-422-1107	VERNAL CITY EXPENSE	.00	3,519.26	3,500.00	(19.26)	100.6
10-422-1203	TEMP EMPLOYEES/ CITY FIRES	(4,025.00)	9,575.00	.00	(9,575.00)	.0
10-422-1311	LONG TERM DISABILITY	(23.96)	8.90	.00	(8.90)	.0
10-422-1313	F I C A	(745.28)	903.12	.00	(903.12)	.0
10-422-1314	RETIREMENT/ CITY FOR EMPLOYEE	(948.35)	457.10	.00	(457.10)	.0
10-422-1316	MEDICAL INSURANCE	(28,878.26)	14,472.81	.00	(14,472.81)	.0
10-422-1317	WORKERS COMP.	(525.58)	245.22	.00	(245.22)	.0
10-422-2400	OFFICE EXP, SUPPLIES, POSTAGE	(133.35)	32.50	.00	(32.50)	.0
10-422-4501	PUBLIC EDUCATION	.00	.00	1,500.00	1,500.00	.0
	TOTAL FIRE DEPARTMENT	(40,070.67)	30,994.91	5,000.00	(25,994.91)	619.9
	VICTIMS ADVOCATE					
10-423-1103	PERMANENT EMPLOYEES/ REG HOURS	4,745.70	28,637.05	38,000.00	9,362.95	75.4
10-423-1104	PERMANENT EMPLOYEES/OT	162.73	644.82	500.00	(144.82)	129.0
10-423-1108	VOCA PAYROLL	6,039.19	56,665.85	50,000.00	(6,665.85)	113.3
10-423-1311	LONG TERM DISABILITY	23.46	131.91	200.00	68.09	66.0
10-423-1313	F I C A	376.92	2,060.91	2,000.00	(60.91)	103.1
10-423-1314	RETIREMENT/ CITY FOR EMPLOYEE	1,135.06	6,538.85	7,000.00	461.15	93.4
10-423-1316	MEDICAL INSURANCE	1,126.48	14,854.33	20,000.00	5,145.67	74.3
10-423-1317	WORKERS COMP.	79.42	886.74	1,000.00	113.26	88.7
10-423-1507	VOCA RETIRMENT	1,083.03	9,264.20	3,000.00	(6,264.20)	308.8
10-423-1508	VOCA F I C A	413.52	4,207.73	2,000.00	(2,207.73)	210.4
10-423-1517	VOCA LONG TERM DISABILITY	24.57	231.49	500.00	268.51	46.3
10-423-1518	VOCA MEDICAL INSURANCE	3,072.24	18,943.10	5,000.00	(13,943.10)	378.9
10-423-1519	VOCA STATE INSURANCE FUND	97.98	1,791.44	500.00	(1,291.44)	358.3
10-423-1520	VOCA TRAVEL AND TRAINING	(200.00)	3,271.79	6,019.00	2,747.21	54.4
10-423-2300	TRAVEL	.00	714.34	3,000.00	2,285.66	23.8
10-423-2400	OFFICE SUPPLIES, POSTAGE	1.50	923.31	1,500.00	576.69	61.6
10-423-2500	EQPMT: SUPPLIES & MAINTENANCE	44.00	350.05	1,500.00	1,149.95	23.3
10-423-2800	CELL PHONE	713.88	2,498.74	2,300.00	(198.74)	108.6
10-423-2900	FUEL	88.86	918.82	1,500.00	581.18	61.3
10-423-3610	TRAINING	.00	279.76	800.00	520.24	35.0
10-423-4500	SPECIAL DEPARTMENTAL SUPPLIES	1,000.00	1,199.64	1,500.00	300.36	80.0
10-423-4521	UNIFORMS	.00	162.66	300.00	137.34	54.2
10-423-4600	V.A. CONTRIBUTION EXPENSE	.00	899.02	4,000.00	3,100.98	22.5
	TOTAL VICTIMS ADVOCATE	20,028.54	156,076.55	152,119.00	(3,957.55)	102.6
	ANIMAL SHELTER					
10-426-2400	OFFICE EXP, SUPPLIES, POSTAGE	(52.93)	22.61	.00	(22.61)	.0
	TOTAL ANIMAL SHELTER	(52.93)	22.61	.00	(22.61)	.0

GENERAL FUND

		PERIOD ACTUAL	YTD ACTUAL	BUDGET	UNEXPENDED	PCNT
	STREETS DEPARTMENT					
10-441-1103	PERM EMPLOYEES/ REG HOURS	36,679.56	377,923.71	480,000.00	102,076.29	78.7
10-441-1104	PERM EMPLOYEES/ OT HOURS	1,811.94	24,400.25	35,000.00	10,599.75	69.7
10-441-1108	WAGES - HOLLY-DAYS	365.33	37,741.88	40,000.00	2,258.12	94.4
10-441-1311	LONG TERM DISABILITY	190.97	2,179.97	3,100.00	920.03	70.3
10-441-1313	F I C A	2,846.02	33,383.47	40,000.00	6,616.53	83.5
10-441-1314	RETIREMENT/ CITY FOR EMPLOYEE	6,750.33	77,955.98	95,000.00	17,044.02	82.1
10-441-1316	MEDICAL INSURANCE	13,292.61	127,524.32	190,000.00	62,475.68	67.1
10-441-1317	WORKERS COMP.	789.64	17,218.49	30,000.00	12,781.51	57.4
10-441-1318	STATE UNEMPLOYMENT	.00	.00	2,000.00	2,000.00	.0
10-441-2100	BOOKS, SUBSCRIPT, MEMBERSHIPS	.00	.00	600.00	600.00	.0
10-441-2300	TRAVEL	.00	3,603.70	4,100.00	496.30	87.9
10-441-2400	OFFICE SUPPLIES	.00	60.82	2,600.00	2,539.18	2.3
10-441-2500	EQPMT: SUPPLIES & MAINTENANCE	7,307.73	80,624.43	80,000.00	(624.43)	100.8
10-441-2800	TELEPHONE	218.21	3,208.59	3,400.00	191.41	94.4
10-441-2900	FUEL	3,461.32	25,232.85	30,000.00	4,767.15	84.1
10-441-3100	PROFESSIONAL & TECH SERVICES	.00	2,640.00	5,000.00	2,360.00	52.8
10-441-3110	LAND FILL FEES	1,000.00	4,000.00	5,000.00	1,000.00	80.0
10-441-3610	TRAINING	1,205.00	3,816.35	4,200.00	383.65	90.9
10-441-4521	UNIFORMS	.00	4,636.16	6,000.00	1,363.84	77.3
10-441-4530	SPECIAL HIGHWAY SUPPLIES	97.21	37,763.87	85,000.00	47,236.13	44.4
10-441-4532	ROAD PAINT STRIPING	.00	875.00	125,000.00	124,125.00	.7
10-441-4534	SIDEWALK HAZARD REPAIR	6,408.00	42,453.50	50,000.00	7,546.50	84.9
10-441-4550	SOFTWARE & UPGRADE EXPENSE	.00	11.52	1,000.00	988.48	1.2
10-441-4630	STREET ENHANCEMENTS	27.79	3,311.89	10,000.00	6,688.11	33.1
10-441-4640	STREET LIGHTING	19,715.63	220,328.10	240,000.00	19,671.90	91.8
	TOTAL STREETS DEPARTMENT	102,167.29	1,130,894.85	1,567,000.00	436,105.15	72.2

GENERAL FUND

		PERIOD ACTUAL	YTD ACTUAL	BUDGET	UNEXPENDED	PCNT
	MOTOR POOL					
10-444-1103	PERM EMPLOYEES/ REG HOURS	9,006.40	99,611.82	122,000.00	22,388.18	81.7
10-444-1104	PERM EMPLOYEES/ OT HOURS	.00	1,492.48	1,000.00	(492.48)	149.3
10-444-1311	LONG TERM DISABILITY	44.92	511.24	700.00	188.76	73.0
10-444-1313	F I C A	652.58	7,582.76	9,200.00	1,617.24	82.4
10-444-1314	RETIREMENT/ CITY FOR EMPLOYEE	1,590.61	18,037.68	23,000.00	4,962.32	78.4
10-444-1316	MEDICAL INSURANCE	3,183.21	31,767.87	37,000.00	5,232.13	85.9
10-444-1317	WORKERS COMP.	145.94	3,209.19	2,600.00	(609.19)	123.4
10-444-2300	TRAVEL	.00	361.52	600.00	238.48	60.3
10-444-2400	OFFICE EXP, SUPPLIES, POSTAGE	.00	.00	250.00	250.00	.0
10-444-2500	EQPMT: SUPPLIES & MAINTENANCE	(877.71)	10,431.87	8,000.00	(2,431.87)	130.4
10-444-2800	TELEPHONE	66.98	656.25	800.00	143.75	82.0
10-444-2900	FUEL	(7,477.93)	(6,089.26)	2,300.00	8,389.26	(264.8)
10-444-2950	FUEL - SERVICE CHARGE	.00	2,501.72	3,300.00	798.28	75.8
10-444-3610	TRAINING	.00	.00	500.00	500.00	.0
10-444-4521	UNIFORMS	79.99	79.99	900.00	820.01	8.9
10-444-4522	SMALL TOOLS	.00	506.82	1,000.00	493.18	50.7
10-444-5003	VEHICLE SOFTWARE UPGRADES	.00	199.99	850.00	650.01	23.5
	TOTAL MOTOR POOL	6,414.99	170,861.94	214,000.00	43,138.06	79.8
	PARKWAYS/BOULEVARDS					
10-451-1103	PERMANENT EMPLOYEES/REG HOURS	5,875.21	64,584.45	75,000.00	10,415.55	86.1
10-451-1104	PERM EMPLOYEES/ OT HOURS	83.75	2,226.85	8,000.00	5,773.15	27.8
10-451-1311	LONG TERM DISABILITY	29.37	322.85	600.00	277.15	53.8
10-451-1313	F I C A	427.37	4,977.00	8,000.00	3,023.00	62.2
10-451-1314	RETIREMENT/ CITY FOR EMPLOYEES	988.74	10,986.22	15,000.00	4,013.78	73.2
10-451-1316	MEDICAL INSURANCE	3,225.13	32,255.33	44,000.00	11,744.67	73.3
10-451-1317	WORKERS COMP.	96.56	2,105.97	2,500.00	394.03	84.2
10-451-2300	TRAVEL	.00	1,200.35	2,000.00	799.65	60.0
10-451-2400	OFFICE EXP, SUPPLIES, POSTAGE	40.00	40.00	200.00	160.00	20.0
10-451-2500	EQUIPMENT-SUPPLIES & MAINT	264.47	5,604.28	5,000.00	(604.28)	112.1
10-451-2600	MAIN STREET EXPENSE	718.07	12,401.64	80,000.00	67,598.36	15.5
10-451-2601	TREE TRIMMING EXPENSE	1,950.00	1,950.00	2,000.00	50.00	97.5
10-451-2602	WALKING PARK	.00	8,042.11	15,000.00	6,957.89	53.6
10-451-2603	COBBLEROCK PARK	224.10	3,404.73	6,000.00	2,595.27	56.8
10-451-2607	MAINTENANCE - AGGIE BLVDE	13.16	4,115.95	12,000.00	7,884.05	34.3
10-451-2608	MAINTENANCE - STATE CONTRACT	.00	1,400.00	4,200.00	2,800.00	33.3
10-451-2800	TELEPHONE	50.00	500.00	600.00	100.00	83.3
10-451-2900	FUEL	115.08	2,727.68	6,000.00	3,272.32	45.5
10-451-3610	TRAINING	.00	590.00	600.00	10.00	98.3
10-451-4521	UNIFORMS	117.85	952.38	1,500.00	547.62	63.5
10-451-4533	TREE REMOVAL & REPLANTING	.00	.00	1,000.00	1,000.00	.0
10-451-4534	BANNER REPLACEMENT & REPAIR	.00	2,331.52	4,000.00	1,668.48	58.3
10-451-4600	BILLBOARD LEASE	.00	2,060.00	1,500.00	(560.00)	137.3
10-451-5508	TREE BOXES / BRICK	.00	.00	10,000.00	10,000.00	.0
	TOTAL PARKWAYS/BOULEVARDS	14,218.86	164,779.31	304,700.00	139,920.69	54.1

VERNAL CITY CORPORATION
EXPENDITURES WITH COMPARISON TO BUDGET
FOR THE 10 MONTHS ENDING APRIL 30, 2020

GENERAL FUND

		PERIOD ACTUAL	YTD ACTUAL	BUDGET	UNEXPENDED	PCNT
	TRANSFERS & CONTRIBUTIONS					
10-480-7105	TRANS DEBT SERV:CIB ST 2001A	68,000.00	68,000.00	68,000.00	.00	100.0
10-480-7106	TRANS DEBT SERV: CIB ST 2001B	53,000.00	53,000.00	53,000.00	.00	100.0
10-480-7111	TRANS DEBT SERV: CIB 2003	77,000.00	77,000.00	77,000.00	.00	100.0
10-480-7138	TRANS: DEBT 2009 B	.00	.00	39,000.00	39,000.00	.0
10-480-7158	TRANS MBA: SALES TAX FOR BOND	66,000.00	263,937.50	265,000.00	1,062.50	99.6
10-480-7330	CONTRIB TO COUNTY: GRANT WRITE	.00	25,000.00	25,000.00	.00	100.0
10-480-7336	CONTRIB TO COUNTY: CEMTERY IMP	.00	39,419.82	50,000.00	10,580.18	78.8
10-480-7337	CONTRIB TO COUNTY: CEMETERY	.00	78,069.54	110,000.00	31,930.46	71.0
10-480-7338	CONTRIB TO CONFERENCE CENTER	50,000.00	200,000.00	200,000.00	.00	100.0
10-480-7339	CONTRIB TO U.B.N.S.F.	.00	.00	8,500.00	8,500.00	.0
10-480-7341	STATE COURT SURCHARGE	.00	123,176.07	155,000.00	31,823.93	79.5
10-480-7344	CDA - SALES TAX	.00	.00	45,000.00	45,000.00	.0
10-480-7359	LEASE PAYMENTS A - MBA	.00	107,000.00	107,000.00	.00	100.0
10-480-7360	LEASE PAYMENTS B - MBA	.00	119,425.00	120,000.00	575.00	99.5
	TOTAL TRANSFERS & CONTRIBUTIONS	314,000.00	1,154,027.93	1,322,500.00	168,472.07	87.3
	TOTAL FUND EXPENDITURES	821,772.13	8,095,367.46	10,198,419.00	2,103,051.54	79.4
	NET REVENUE OVER EXPENDITURES	(234,201.54)	(1,266,927.78)	.00	1,266,927.78	.0

VERNAL CITY CORPORATION
BALANCE SHEET
APRIL 30, 2020

GOLF COURSE FUND

	ASSETS			
15-1611000	LAND		300,711.28	
15-1621000	BUILDINGS		58,299.00	
15-1622000	ALLOW FOR DEPREC: BUILDINGS		(58,299.00)	
15-1631000	IMPROVEMENTS OTHER THAN BLDG		94,662.62	
15-1632000	ALLOW FOR DEPREC:IMPROVEMENTS		(94,662.62)	
	TOTAL ASSETS			300,711.28
	LIABILITIES AND EQUITY			
	FUND EQUITY			
	UNAPPROPRIATED FUND BALANCE:			
15-2980000	BEGINNING OF YEAR	300,711.28		
	REVENUE OVER EXPENDITURES - YTD			
	BALANCE - CURRENT DATE		300,711.28	
	TOTAL FUND EQUITY			300,711.28
	TOTAL LIABILITIES AND EQUITY			300,711.28

VERNAL CITY CORPORATION
BALANCE SHEET
APRIL 30, 2020

NARCOTICS STRIKE FORCE FUND

	ASSETS			
21-1151000	POOLED INVESTMENT		181,779.94	
21-1190000	CASH: ALLOC FROM GEN'L FUND		16,118.03	
21-1411000	DUE FROM OTHER GOV'T UNITS		14,500.00	
	TOTAL ASSETS			212,397.97
	LIABILITIES AND EQUITY			
	LIABILITIES			
21-2131000	ACCOUNTS PAYABLE		105.51	
21-2250000	ACCRUED PAYROLL/TAXES PAYABLE		6,199.37	
21-2260000	WORKER'S COMP PAYABLE		2,103.07	
	TOTAL LIABILITIES			8,407.95
	FUND EQUITY			
21-2971000	RESERVED GOVN BOARD FUNDS		10,986.61	
	UNAPPROPRIATED FUND BALANCE:			
21-2980000	BEGINNING OF YEAR	207,842.35		
	REVENUE OVER EXPENDITURES - YTD	7,836.98		
	BALANCE - CURRENT DATE		215,679.33	
	TOTAL FUND EQUITY			226,665.94
	TOTAL LIABILITIES AND EQUITY			235,073.89

VERNAL CITY CORPORATION
REVENUES WITH COMPARISON TO BUDGET
FOR THE 10 MONTHS ENDING APRIL 30, 2020

NARCOTICS STRIKE FORCE FUND

		PERIOD ACTUAL	YTD ACTUAL	BUDGET	UNEARNED	PCNT
	MISCELLANEOUS SERVICES					
21-360-6100	INTEREST EARNINGS	214.87	3,433.68	.00	(3,433.68)	.0
21-360-6412	RESTITUTION	276.99	822.47	.00	(822.47)	.0
	TOTAL MISCELLANEOUS SERVICES	491.86	4,256.15	.00	(4,256.15)	.0
	REVENUE AND CONTRIBUTIONS					
21-382-8211	DEPT OF CRIMINAL JUSTICE GRANT	.00	51,962.54	61,000.00	9,037.46	85.2
21-382-8212	DUCHESNE COUNTY SHARE	14,500.00	14,500.00	8,500.00	(6,000.00)	170.6
21-382-8213	UINTAH COUNTY SHARE	14,500.00	14,500.00	8,500.00	(6,000.00)	170.6
21-382-8214	VERNAL CITY SHARE	.00	.00	8,500.00	8,500.00	.0
21-382-8215	ROOSEVELT CITY SHARE	14,500.00	14,500.00	8,500.00	(6,000.00)	170.6
21-382-8218	NAPLES CITY SHARE	8,500.00	8,500.00	8,500.00	.00	100.0
21-382-8900	USE OF BEGINNING FUND BALANCE	.00	.00	8,000.00	8,000.00	.0
	TOTAL REVENUE AND CONTRIBUTIONS	52,000.00	103,962.54	111,500.00	7,537.46	93.2
	TOTAL FUND REVENUE	52,491.86	108,218.69	111,500.00	3,281.31	97.1

VERNAL CITY CORPORATION
EXPENDITURES WITH COMPARISON TO BUDGET
FOR THE 10 MONTHS ENDING APRIL 30, 2020

NARCOTICS STRIKE FORCE FUND

		PERIOD ACTUAL	YTD ACTUAL	BUDGET	UNEXPENDED	PCNT
	FUND EXPENDITURES					
21-400-1103	PERM EMPLOYEES/ REG HOURS	6,916.50	73,348.65	80,000.00	6,651.35	91.7
21-400-1313	F I C A	529.13	5,556.38	5,000.00	(556.38)	111.1
21-400-1317	WORKERS COMP.	199.55	2,150.11	2,000.00	(150.11)	107.5
21-400-2300	TRAVEL	1,227.95	2,375.40	2,000.00	(375.40)	118.8
21-400-2400	OFFICE EXP, SUPPLIES, POSTAGE	.00	419.12	500.00	80.88	83.8
21-400-2850	CELLPHONE - SURVEILANCE	57.71	579.59	700.00	120.41	82.8
21-400-3200	MAINTENANCE AGREEMENTS	.00	.00	2,000.00	2,000.00	.0
21-400-4100	INSURANCE PREMIUMS	.00	7,952.46	10,000.00	2,047.54	79.5
21-400-4600	MISCELLANEOUS SUPPLIES	.00	.00	300.00	300.00	.0
21-400-4610	MISCELLANEOUS SERVICES	.00	8,000.00	9,000.00	1,000.00	88.9
	TOTAL FUND EXPENDITURES	8,930.84	100,381.71	111,500.00	11,118.29	90.0
	TOTAL FUND EXPENDITURES	8,930.84	100,381.71	111,500.00	11,118.29	90.0
	NET REVENUE OVER EXPENDITURES	43,561.02	7,836.98	.00	(7,836.98)	.0

VERNAL CITY CORPORATION
BALANCE SHEET
APRIL 30, 2020

CAPITAL PROJECT FUND

	ASSETS			
23-1190000	CASH-ALLOC TO OTHER FUNDS		20,897.40	
	TOTAL ASSETS			20,897.40
	LIABILITIES AND EQUITY			
	FUND EQUITY			
	UNAPPROPRIATED FUND BALANCE:			
23-2980000	BEGINNING OF YEAR	11,239.04		
	REVENUE OVER EXPENDITURES - YTD	9,658.36		
	BALANCE - CURRENT DATE		20,897.40	
	TOTAL FUND EQUITY			20,897.40
	TOTAL LIABILITIES AND EQUITY			20,897.40

VERNAL CITY CORPORATION
REVENUES WITH COMPARISON TO BUDGET
FOR THE 10 MONTHS ENDING APRIL 30, 2020

CAPITAL PROJECT FUND

		PERIOD ACTUAL	YTD ACTUAL	BUDGET	UNEARNED	PCNT
	REVENUE FUND					
23-361-3730	HAVEN ESTATES REVENUE	.00	9,658.36	.00	(9,658.36)	.0
	TOTAL REVENUE FUND	.00	9,658.36	.00	(9,658.36)	.0
	TOTAL FUND REVENUE	.00	9,658.36	.00	(9,658.36)	.0
	NET REVENUE OVER EXPENDITURES	.00	9,658.36	.00	(9,658.36)	.0

VERNAL CITY CORPORATION
BALANCE SHEET
APRIL 30, 2020

UCVC INTERLOCAL - SOCCER FIELD

	ASSETS			
24-1190000	CASH-ALLOC TO OTHER FUNDS		1,196.47	
	TOTAL ASSETS			1,196.47
	LIABILITIES AND EQUITY			
	FUND EQUITY			
	UNAPPROPRIATED FUND BALANCE:			
24-2980000	BEGINNING OF YEAR	1,196.47		
	REVENUE OVER EXPENDITURES - YTD	550.00		
	BALANCE - CURRENT DATE		1,746.47	
	TOTAL FUND EQUITY			1,746.47
	TOTAL LIABILITIES AND EQUITY			1,746.47

VERNAL CITY CORPORATION
REVENUES WITH COMPARISON TO BUDGET
FOR THE 10 MONTHS ENDING APRIL 30, 2020

UCVC INTERLOCAL - SOCCER FIELD

		PERIOD ACTUAL	YTD ACTUAL	BUDGET	UNEARNED	PCNT
	MISCELLANEOUS SERVICES					
24-360-6304	BASE RENTS: UINTAH RECREATION	.00	550.00	.00	(550.00)	.0
	TOTAL MISCELLANEOUS SERVICES	.00	550.00	.00	(550.00)	.0
	TOTAL FUND REVENUE	.00	550.00	.00	(550.00)	.0
	NET REVENUE OVER EXPENDITURES	.00	550.00	.00	(550.00)	.0

VERNAL CITY CORPORATION
BALANCE SHEET
APRIL 30, 2020

DEBT SERVICE FUND

	ASSETS			
31-1151000	POOLED INVESTMENT BOND GUARANT		372,763.77	
31-1190000	CASH-ALLOC TO OTHER FUNDS		(60,930.01)	
31-1350000	2009 B STORM - ESCROW		40,743.52	
31-1351000	2009 B DEBT RESERVE		37,853.23	
31-1444000	SID 2002-1 REC'BLE- A/R		14,748.79	
31-1447000	SID 2004-1 REC'BLE- A/R		7,528.73	
31-1450100	SID 2006-1 REC'BLE- A/R		62,540.98	
31-1451000	SID 2008-1 FUTURE- PRINCIPLE		6,451.15	
31-1451100	SID 2008-1 REC'BLE- A/R		(1,048.31)	
31-1452000	SID 2013 - 2008 ASHLEY PRCPLE		39,259.60	
31-1452500	SID 2013 - 2008 ASHLEY- A/R		3,775.96	
	TOTAL ASSETS			523,687.41
	LIABILITIES AND EQUITY			
	LIABILITIES			
31-2540000	DEFERRED REVENUE		48,852.28	
	TOTAL LIABILITIES			48,852.28
	FUND EQUITY			
31-2911000	RESERVED FOR BOND RETIREMENT		388,024.15	
	UNAPPROPRIATED FUND BALANCE:			
31-2980000	BEGINNING OF YEAR	323,848.28		
	REVENUE OVER EXPENDITURES - YTD	(36,265.69)		
	BALANCE - CURRENT DATE		287,582.59	
	TOTAL FUND EQUITY			675,606.74
	TOTAL LIABILITIES AND EQUITY			724,459.02

VERNAL CITY CORPORATION
REVENUES WITH COMPARISON TO BUDGET
FOR THE 10 MONTHS ENDING APRIL 30, 2020

DEBT SERVICE FUND

		PERIOD ACTUAL	YTD ACTUAL	BUDGET	UNEARNED	PCNT
	SPECIAL IMPROVEMENT DISTRICTS					
31-361-3610	INTEREST ON INVESTMENTS	551.46	8,634.31	3,500.00	(5,134.31)	246.7
31-361-7010	SID 2013 PMT FROM PPTY OWNERS	.00	.00	3,000.00	3,000.00	.0
31-361-7024	SID 08-1 PMT FROM PPTY OWNERS	.00	.00	3,000.00	3,000.00	.0
	TOTAL SPECIAL IMPROVEMENT DISTRICTS	551.46	8,634.31	9,500.00	865.69	90.9
	CONTRIBUTIONS & TRANSFERS					
31-380-8106	TRANS GEN FND:CIB ST BOND 2001	121,000.00	121,000.00	121,000.00	.00	100.0
31-380-8110	TRANS GEN: CIB REV BOND 2003 B	77,000.00	77,000.00	77,000.00	.00	100.0
31-380-8115	TRANS GEN: CIB 2009 B	.00	.00	38,000.00	38,000.00	.0
	TOTAL CONTRIBUTIONS & TRANSFERS	198,000.00	198,000.00	236,000.00	38,000.00	83.9
	TOTAL FUND REVENUE	198,551.46	206,634.31	245,500.00	38,865.69	84.2

VERNAL CITY CORPORATION
EXPENDITURES WITH COMPARISON TO BUDGET
FOR THE 10 MONTHS ENDING APRIL 30, 2020

DEBT SERVICE FUND

		PERIOD ACTUAL	YTD ACTUAL	BUDGET	UNEXPENDED	PCNT
	SPECIAL IMPROVEMENTS DISTRICTS					
31-470-6130	2017 ZIONS BOND TRUST FEE'S	.00	1,500.00	2,500.00	1,000.00	60.0
31-470-6372	CIB 2001A ST BOND PRINCIPAL	.00	63,000.00	63,000.00	.00	100.0
31-470-6373	CIB 2001A STREET BOND INTEREST	.00	4,550.00	5,000.00	450.00	91.0
31-470-6374	CIB 2001B ST BOND PRINCIPAL	.00	53,000.00	53,000.00	.00	100.0
31-470-6380	CIB 2003B REV. BOND PRINCIPAL	.00	61,000.00	61,000.00	.00	100.0
31-470-6381	CIB 2003B REV. BOND INTEREST	.00	15,350.00	16,000.00	650.00	95.9
31-470-6535	CIB 2009B REV BOND	.00	37,000.00	37,000.00	.00	100.0
31-470-6536	CIB 2009B TRUST FEE'S	.00	1,500.00	2,000.00	500.00	75.0
31-470-6538	CIB 2014 S.A.A. BOND	.00	6,000.00	6,000.00	.00	100.0
	TOTAL SPECIAL IMPROVEMENTS DISTRICTS	.00	242,900.00	245,500.00	2,600.00	98.9
	TOTAL FUND EXPENDITURES	.00	242,900.00	245,500.00	2,600.00	98.9
	NET REVENUE OVER EXPENDITURES	198,551.46	(36,265.69)	.00	36,265.69	.0

VERNAL CITY CORPORATION
BALANCE SHEET
APRIL 30, 2020

STREET CONSTRUCTION FUND

	ASSETS			
35-1151000	POOLED INVESTMENT		219,123.14	
35-1190000	CASH:ALLOC FROM GEN'L FUND		(263,322.68)	
	TOTAL ASSETS			(44,199.54)
	LIABILITIES AND EQUITY			
	FUND EQUITY			
	UNAPPROPRIATED FUND BALANCE:			
35-2980000	BEGINNING OF YEAR	163,629.07		
	REVENUE OVER EXPENDITURES - YTD	(220,166.11)		
	BALANCE - CURRENT DATE		(56,537.04)	
	TOTAL FUND EQUITY			(56,537.04)
	TOTAL LIABILITIES AND EQUITY			(56,537.04)

VERNAL CITY CORPORATION
REVENUES WITH COMPARISON TO BUDGET
FOR THE 10 MONTHS ENDING APRIL 30, 2020

STREET CONSTRUCTION FUND

		PERIOD ACTUAL	YTD ACTUAL	BUDGET	UNEARNED	PCNT
	FUND REVENUE					
35-300-3610	INTEREST ON INVESTMENTS	259.02	4,139.07	5,000.00	860.93	82.8
35-300-8900	USE OF BEGINNING FUND BALANCE	.00	.00	50,000.00	50,000.00	.0
	TOTAL FUND REVENUE	259.02	4,139.07	55,000.00	50,860.93	7.5
	TOTAL FUND REVENUE	259.02	4,139.07	55,000.00	50,860.93	7.5

VERNAL CITY CORPORATION
EXPENDITURES WITH COMPARISON TO BUDGET
FOR THE 10 MONTHS ENDING APRIL 30, 2020

STREET CONSTRUCTION FUND

		PERIOD ACTUAL	YTD ACTUAL	BUDGET	UNEXPENDED	PCNT
	FUND EXPENDITURES					
35-400-5501	2019 UDOT STREET PROJECT	101,677.11	211,967.68	.00	(211,967.68)	.0
35-400-5509	ADA SIDEWALK REPAIR	.00	.00	50,000.00	50,000.00	.0
35-400-5510	SAFE SIDEWALK 500 N-UBH SR121	(101,677.11)	2,395.00	.00	(2,395.00)	.0
35-400-5511	SAFE ROUTES - 500 WEST	.00	9,942.50	.00	(9,942.50)	.0
35-400-5516	CURB,GUTTER,SIDEWALK REPLACE	.00	.00	5,000.00	5,000.00	.0
	TOTAL FUND EXPENDITURES	.00	224,305.18	55,000.00	(169,305.18)	407.8
	TOTAL FUND EXPENDITURES	.00	224,305.18	55,000.00	(169,305.18)	407.8
	NET REVENUE OVER EXPENDITURES	259.02	(220,166.11)	.00	220,166.11	.0

VERNAL CITY CORPORATION
BALANCE SHEET
APRIL 30, 2020

GRANT / GREEN SPACE FUND

	ASSETS			
38-1151000	POOLED INVESTMENT		145,848.51	
38-1190000	CASH: ALLOC FROM GEN'L FUND		33,104.54	
	TOTAL ASSETS			178,953.05
	LIABILITIES AND EQUITY			
	LIABILITIES			
38-2131000	ACCOUNTS PAYABLE		1,425.61	
	TOTAL LIABILITIES			1,425.61
	FUND EQUITY			
	UNAPPROPRIATED FUND BALANCE:			
38-2980000	BEGINNING OF YEAR	191,941.88		
	REVENUE OVER EXPENDITURES - YTD	(35,488.15)		
	BALANCE - CURRENT DATE		156,453.73	
	TOTAL FUND EQUITY			156,453.73
	TOTAL LIABILITIES AND EQUITY			157,879.34

VERNAL CITY CORPORATION
REVENUES WITH COMPARISON TO BUDGET
FOR THE 10 MONTHS ENDING APRIL 30, 2020

GRANT / GREEN SPACE FUND

		PERIOD ACTUAL	YTD ACTUAL	BUDGET	UNEARNED	PCNT
	FUND REVENUE					
38-300-6100	INTEREST ON INVESTMENTS	172.40	2,754.97	.00	(2,754.97)	.0
38-300-8900	USE OF BEGINNING FUND BALANCE	.00	.00	5,000.00	5,000.00	.0
	TOTAL FUND REVENUE	172.40	2,754.97	5,000.00	2,245.03	55.1
	TOTAL FUND REVENUE	172.40	2,754.97	5,000.00	2,245.03	55.1

VERNAL CITY CORPORATION
EXPENDITURES WITH COMPARISON TO BUDGET
FOR THE 10 MONTHS ENDING APRIL 30, 2020

GRANT / GREEN SPACE FUND

		PERIOD ACTUAL	YTD ACTUAL	BUDGET	UNEXPENDED	PCNT
	FUND EXPENDITURES					
38-400-5515	ACTIVE/HEALTHY COMMUNITY EXP.	.00	1,710.00	.00	(1,710.00)	.0
38-400-5516	RECREATION - WAYFINDING PROJCT	.00	38.54	.00	(38.54)	.0
38-400-5518	ACTIVE/HEALTHY - WAYFINDING	612.70	11,121.70	.00	(11,121.70)	.0
38-400-5520	MASTER PLAN	.00	.00	5,000.00	5,000.00	.0
38-400-5522	INNOVATION EXPENSE - 2019	4,554.20	25,372.88	.00	(25,372.88)	.0
	TOTAL FUND EXPENDITURES	5,166.90	38,243.12	5,000.00	(33,243.12)	764.9
	TOTAL FUND EXPENDITURES	5,166.90	38,243.12	5,000.00	(33,243.12)	764.9
	NET REVENUE OVER EXPENDITURES	(4,994.50)	(35,488.15)	.00	35,488.15	.0

VERNAL CITY CORPORATION
BALANCE SHEET
APRIL 30, 2020

CITY STORM DRAIN PROJECT

	ASSETS			
39-1151000	POOLED INVESTMENT		144,402.95	
39-1190000	CASH: ALLOC FROM GEN'L FUND		114,003.67	
	TOTAL ASSETS			258,406.62
	LIABILITIES AND EQUITY			
	FUND EQUITY			
	UNAPPROPRIATED FUND BALANCE:			
39-2980000	BEGINNING OF YEAR	255,678.97		
	REVENUE OVER EXPENDITURES - YTD	2,727.65		
	BALANCE - CURRENT DATE		258,406.62	
	TOTAL FUND EQUITY			258,406.62
	TOTAL LIABILITIES AND EQUITY			258,406.62

VERNAL CITY CORPORATION
REVENUES WITH COMPARISON TO BUDGET
FOR THE 10 MONTHS ENDING APRIL 30, 2020

CITY STORM DRAIN PROJECT

		PERIOD ACTUAL	YTD ACTUAL	BUDGET	UNEARNED	PCNT
	FUND REVENUE					
39-300-6100	INTEREST EARNINGS	170.69	2,727.65	.00	(2,727.65)	.0
	TOTAL FUND REVENUE	170.69	2,727.65	.00	(2,727.65)	.0
	TOTAL FUND REVENUE	170.69	2,727.65	.00	(2,727.65)	.0
	NET REVENUE OVER EXPENDITURES	170.69	2,727.65	.00	(2,727.65)	.0

VERNAL CITY CORPORATION
BALANCE SHEET
APRIL 30, 2020

CDA \ VITALIZATION FUND

	ASSETS			
40-1190000	CASH: ALLOC FROM GEN'L FUND		511.11	
	TOTAL ASSETS			511.11
	LIABILITIES AND EQUITY			
	FUND EQUITY			
	UNAPPROPRIATED FUND BALANCE:			
40-2980000	BEGINNING OF YEAR	511.11		
	REVENUE OVER EXPENDITURES - YTD	(550.00)		
	BALANCE - CURRENT DATE		(38.89)	
	TOTAL FUND EQUITY			(38.89)
	TOTAL LIABILITIES AND EQUITY			(38.89)

VERNAL CITY CORPORATION
REVENUES WITH COMPARISON TO BUDGET
FOR THE 10 MONTHS ENDING APRIL 30, 2020

CDA \ VITALIZATION FUND

		PERIOD ACTUAL	YTD ACTUAL	BUDGET	UNEARNED	PCNT
	FUND REVENUE					
40-300-3750	CDA PROPERTY TAX - TOWN CENTRE	.00	.00	200,000.00	200,000.00	.0
	TOTAL FUND REVENUE	.00	.00	200,000.00	200,000.00	.0
	TOTAL FUND REVENUE	.00	.00	200,000.00	200,000.00	.0

VERNAL CITY CORPORATION
EXPENDITURES WITH COMPARISON TO BUDGET
FOR THE 10 MONTHS ENDING APRIL 30, 2020

CDA \ VITALIZATION FUND

		PERIOD ACTUAL	YTD ACTUAL	BUDGET	UNEXPENDED	PCNT
	FUND EXPENDITURES					
40-400-4300	COMMUNITY DEVELOPMENT EXPENSE	.00	.00	185,000.00	185,000.00	.0
40-400-4400	REVITALIZATION EXPENSE	.00	550.00	15,000.00	14,450.00	3.7
	TOTAL FUND EXPENDITURES	.00	550.00	200,000.00	199,450.00	.3
	TOTAL FUND EXPENDITURES	.00	550.00	200,000.00	199,450.00	.3
	NET REVENUE OVER EXPENDITURES	.00	(550.00)	.00	550.00	.0

VERNAL CITY CORPORATION
BALANCE SHEET
APRIL 30, 2020

MUNICIPAL BLDG PROJECT FUND

	ASSETS			
41-1151000	POOLED INVESTMENT		1,746,781.66	
	TOTAL ASSETS			1,746,781.66
	LIABILITIES AND EQUITY			
	FUND EQUITY			
	UNAPPROPRIATED FUND BALANCE:			
41-2980000	BEGINNING OF YEAR	1,713,786.30		
	REVENUE OVER EXPENDITURES - YTD	32,995.36		
	BALANCE - CURRENT DATE		1,746,781.66	
	TOTAL FUND EQUITY			1,746,781.66
	TOTAL LIABILITIES AND EQUITY			1,746,781.66

VERNAL CITY CORPORATION
REVENUES WITH COMPARISON TO BUDGET
FOR THE 10 MONTHS ENDING APRIL 30, 2020

MUNICIPAL BLDG PROJECT FUND

		PERIOD ACTUAL	YTD ACTUAL	BUDGET	UNEARNED	PCNT
	FUND REVENUE					
41-300-6100	INTEREST EARNINGS	2,064.80	32,995.36	.00	(32,995.36)	.0
	TOTAL FUND REVENUE	2,064.80	32,995.36	.00	(32,995.36)	.0
	TOTAL FUND REVENUE	2,064.80	32,995.36	.00	(32,995.36)	.0
	NET REVENUE OVER EXPENDITURES	2,064.80	32,995.36	.00	(32,995.36)	.0

VERNAL CITY CORPORATION
BALANCE SHEET
APRIL 30, 2020

EQUIPMENT REPLACEMENT FUND

	ASSETS			
42-1151000	POOLED INVESTMENT		596,703.80	
42-1190000	CASH: ALLOC FROM GEN'L FUND		(244,938.85)	
	TOTAL ASSETS			351,764.95
	LIABILITIES AND EQUITY			
	FUND EQUITY			
	UNAPPROPRIATED FUND BALANCE:			
42-2980000	BEGINNING OF YEAR	585,461.10		
	REVENUE OVER EXPENDITURES - YTD	(233,696.15)		
	BALANCE - CURRENT DATE		351,764.95	
	TOTAL FUND EQUITY			351,764.95
	TOTAL LIABILITIES AND EQUITY			351,764.95

VERNAL CITY CORPORATION
REVENUES WITH COMPARISON TO BUDGET
FOR THE 10 MONTHS ENDING APRIL 30, 2020

EQUIPMENT REPLACEMENT FUND

		PERIOD ACTUAL	YTD ACTUAL	BUDGET	UNEARNED	PCNT
	FUND REVENUE					
42-300-3610	INTEREST ON INVESTMENT	705.34	11,271.27	.00	(11,271.27)	.0
42-300-8900	USE OF BEGINNING FUND BALANCE	.00	.00	270,000.00	270,000.00	.0
	TOTAL FUND REVENUE	705.34	11,271.27	270,000.00	258,728.73	4.2
	TOTAL FUND REVENUE	705.34	11,271.27	270,000.00	258,728.73	4.2

VERNAL CITY CORPORATION
EXPENDITURES WITH COMPARISON TO BUDGET
FOR THE 10 MONTHS ENDING APRIL 30, 2020

EQUIPMENT REPLACEMENT FUND

		PERIOD ACTUAL	YTD ACTUAL	BUDGET	UNEXPENDED	PCNT
	FUND EXPENDITURES					
42-400-5001	STREET SWEEPER	.00	244,967.42	270,000.00	25,032.58	90.7
	TOTAL FUND EXPENDITURES	.00	244,967.42	270,000.00	25,032.58	90.7
	TOTAL FUND EXPENDITURES	.00	244,967.42	270,000.00	25,032.58	90.7
	NET REVENUE OVER EXPENDITURES	705.34	(233,696.15)	.00	233,696.15	.0

VERNAL CITY CORPORATION
BALANCE SHEET
APRIL 30, 2020

HOUSING REHABILITATION

	ASSETS			
46-1190000	CASH: ALLOC FROM GEN'L FUND		(34,054.50)	
	TOTAL ASSETS			(34,054.50)
	LIABILITIES AND EQUITY			
	LIABILITIES			
46-2131000	ACCOUNTS PAYABLE		1,499.75	
	TOTAL LIABILITIES			1,499.75
	FUND EQUITY			
	UNAPPROPRIATED FUND BALANCE:			
	REVENUE OVER EXPENDITURES - YTD	(10,064.00)		
	BALANCE - CURRENT DATE		(10,064.00)	
	TOTAL FUND EQUITY			(10,064.00)
	TOTAL LIABILITIES AND EQUITY			(8,564.25)

VERNAL CITY CORPORATION
REVENUES WITH COMPARISON TO BUDGET
FOR THE 10 MONTHS ENDING APRIL 30, 2020

HOUSING REHABILITATION

		PERIOD ACTUAL	YTD ACTUAL	BUDGET	UNEARNED	PCNT
	FUND REVENUE					
46-300-3304	CDBG GRANT: WOMENS CRISIS CENT	.00	29,345.00	.00	(29,345.00)	.0
	TOTAL FUND REVENUE	.00	29,345.00	.00	(29,345.00)	.0
	TOTAL FUND REVENUE	.00	29,345.00	.00	(29,345.00)	.0

VERNAL CITY CORPORATION
EXPENDITURES WITH COMPARISON TO BUDGET
FOR THE 10 MONTHS ENDING APRIL 30, 2020

HOUSING REHABILITATION

		PERIOD ACTUAL	YTD ACTUAL	BUDGET	UNEXPENDED	PCNT
	FUND EXPENDITURES					
46-400-5501	CDBG HOUSING REHAB CONSTRUCTIO	2,999.50	39,409.00	.00	(39,409.00)	.0
	TOTAL FUND EXPENDITURES	2,999.50	39,409.00	.00	(39,409.00)	.0
	TOTAL FUND EXPENDITURES	2,999.50	39,409.00	.00	(39,409.00)	.0
	NET REVENUE OVER EXPENDITURES	(2,999.50)	(10,064.00)	.00	10,064.00	.0

VERNAL CITY CORPORATION
BALANCE SHEET
APRIL 30, 2020

EMERGENCY PREPAREDNESS FUND

	ASSETS			
47-1151000	POOLED INVESTMENT		79,887.58	
	TOTAL ASSETS			79,887.58
	LIABILITIES AND EQUITY			
	FUND EQUITY			
	UNAPPROPRIATED FUND BALANCE:			
47-2980000	BEGINNING OF YEAR	78,378.57		
	REVENUE OVER EXPENDITURES - YTD	1,509.01		
	BALANCE - CURRENT DATE		79,887.58	
	TOTAL FUND EQUITY			79,887.58
	TOTAL LIABILITIES AND EQUITY			79,887.58

VERNAL CITY CORPORATION
REVENUES WITH COMPARISON TO BUDGET
FOR THE 10 MONTHS ENDING APRIL 30, 2020

EMERGENCY PREPAREDNESS FUND

		PERIOD ACTUAL	YTD ACTUAL	BUDGET	UNEARNED	PCNT
	FUND REVENUE					
47-300-6100	INTEREST ON INVESTMENTS	94.43	1,509.01	.00	(1,509.01)	.0
	TOTAL FUND REVENUE	94.43	1,509.01	.00	(1,509.01)	.0
	TOTAL FUND REVENUE	94.43	1,509.01	.00	(1,509.01)	.0
	NET REVENUE OVER EXPENDITURES	94.43	1,509.01	.00	(1,509.01)	.0

VERNAL CITY CORPORATION
BALANCE SHEET
APRIL 30, 2020

PARKING LOT FUND

	ASSETS			
49-1151000	POOLED INVESTMENT		163,859.76	
49-1190000	CASH: ALLOC FROM GEN'L FUND		(2,000.00)	
	TOTAL ASSETS			161,859.76
	LIABILITIES AND EQUITY			
	FUND EQUITY			
	UNAPPROPRIATED FUND BALANCE:			
49-2980000	BEGINNING OF YEAR	158,764.56		
	REVENUE OVER EXPENDITURES - YTD	3,095.20		
	BALANCE - CURRENT DATE		161,859.76	
	TOTAL FUND EQUITY			161,859.76
	TOTAL LIABILITIES AND EQUITY			161,859.76

VERNAL CITY CORPORATION
REVENUES WITH COMPARISON TO BUDGET
FOR THE 10 MONTHS ENDING APRIL 30, 2020

PARKING LOT FUND

		PERIOD ACTUAL	YTD ACTUAL	BUDGET	UNEARNED	PCNT
	FUND REVENUE					
49-300-6100	INTEREST ON INVENSTMENTS	193.69	3,095.20	.00	(3,095.20)	.0
49-300-8900	USE OF BEGINNING FUND BALANCE	.00	.00	123,000.00	123,000.00	.0
	TOTAL FUND REVENUE	193.69	3,095.20	123,000.00	119,904.80	2.5
	TOTAL FUND REVENUE	193.69	3,095.20	123,000.00	119,904.80	2.5

VERNAL CITY CORPORATION
EXPENDITURES WITH COMPARISON TO BUDGET
FOR THE 10 MONTHS ENDING APRIL 30, 2020

PARKING LOT FUND

		PERIOD ACTUAL	YTD ACTUAL	BUDGET	UNEXPENDED	PCNT
	FUND EXPENDITURES					
49-400-5502	DOWNTOWN PARKING	.00	.00	123,000.00	123,000.00	.0
	TOTAL FUND EXPENDITURES	.00	.00	123,000.00	123,000.00	.0
	TOTAL FUND EXPENDITURES	.00	.00	123,000.00	123,000.00	.0
	NET REVENUE OVER EXPENDITURES	193.69	3,095.20	.00	(3,095.20)	.0

VERNAL CITY CORPORATION
BALANCE SHEET
APRIL 30, 2020

VERNAL CITY UTILITIES FUND

ASSETS

50-1140000	UTILITY CLEARING	(85.28)	
50-1151000	POOLED INVESTMENT	2,886,305.39	
50-1152000	RESTRICT INVESTMNT:BOND RESRVE	544,163.28	
50-1154200	CIB 2016 SEWER #7711	364,881.40	
50-1182000	WATER STOCK	54,956.21	
50-1190000	CASH: ALLOC FROM GEN'L FUND	133,372.90	
50-1311000	WATER ACCOUNTS RECEIVABLE	470,452.62	
50-1312000	ALLOW FOR DOUBTFUL ACCTS	(8,691.87)	
50-1313000	ACCOUNTS RECEIVABLE-TRADE	1,219.27	
50-1423000	DUE FROM OTHER GOVERNMENTS	14,250.00	
50-1521000	SPECIAL WATER INVENTORY	45,466.45	
50-1611000	LAND - WATER	7,950.00	
50-1612000	LAND EASEMENTS- SEWER	27,941.00	
50-1613000	LAND EASEMENTS- WATER	38,682.00	
50-1621000	BUILDING - WATER	53,174.77	
50-1622000	ALLOW FOR DEPREC: BLDG - WTR	(41,439.13)	
50-1623000	BUILDINGS - SEWER	23,556.34	
50-1624000	ALLOW FOR DEPREC: BLDGS - SWR	(18,059.83)	
50-1628000	IMPROVEMENTS OTHER: WATER	904,683.92	
50-1629000	ALLOW FOR DPEREC: IMP WATER	(120,305.53)	
50-1631000	WATER DISTRIBUTION SYSTEM	20,744,309.01	
50-1632000	ALLOW FOR DEPREC: WTR SYSTEM	(8,518,932.12)	
50-1633000	CITY SEWER SYSTEM	7,259,865.84	
50-1634000	ALLOW FOR DEPREC: SWR SYSTEM	(3,403,495.08)	
50-1651000	MACHINERY & EQUIPMENT - WATER	336,730.09	
50-1652000	ALLOW FOR DEPREC:MACH&EQPT-WTR	(256,568.79)	
50-1653000	MACHINERY & EQUIPMENT - SEWER	206,030.15	
50-1654000	ALLOW FOR DEPREC:MACH&EQPT-SEW	(183,724.65)	
50-1661000	AUTOMOBILE & TRUCKS - WATER	421,425.56	
50-1662000	ALLOW FOR DEPREC:AUTOS - WTR	(421,325.31)	
50-1663000	AUTOMOBILES & TRUCKS - SEWER	795,676.44	
50-1664000	ALLOW FOR DEPREC:AUTOS - SEW	(508,604.60)	
50-1665000	SOLID WASTE - RME	35,523.70	
50-1666000	ALLOW FOR DEPREC: SW	(35,523.70)	
50-1701000	INVESTMENT: A V S M B	7,217,062.00	
50-1705000	DEFERRED OUTFLOWS - PENSIONS	170,371.06	
	TOTAL ASSETS		29,241,293.51

LIABILITIES AND EQUITY

VERNAL CITY CORPORATION
BALANCE SHEET
APRIL 30, 2020

VERNAL CITY UTILITIES FUND

	LIABILITIES			
50-2131000	ACCOUNTS PAYABLE		119,837.70	
50-2132000	UTILITY DEPOSITS		49,593.00	
50-2134000	ACCURED P/R BENEFITS PAYABLE		33,408.08	
50-2532000	DRINKING WATER BRD BND PAYABLE		33,000.00	
50-2533000	CIB WATER: 2000 W 340,000		200,000.00	
50-2533500	CIB SEWER:2000 W. $282,000		183,000.00	
50-2534000	CIB WATER: 08 SYSTEM $510,000		250,000.00	
50-2537000	CIB LOAN 2016 WATER $280,000		262,000.00	
50-2538000	CIB LOAN 2016 SEWER $653,000		631,000.00	
50-2540000	CIB SEWER: SERIES 2002B		246,000.00	
50-2545000	CIB SEWER: SERIES 2002A		38,000.00	
50-2547000	CIB WATER: SERIES 2002		313,000.00	
50-2548000	CIB SEWER: SERIES 2006		322,000.00	
50-2548500	CIB WATER: SERIES 2008 ASHLEY		80,786.75	
50-2549000	CIB WATER: SERIES 2013		3,958,563.00	
50-2549500	CIB WATER: SERIES 2014		381,140.36	
50-2551000	ACCRUED INTEREST PAYABLE:WATER		2,788.19	
50-2552000	ACCRUED INTEREST PAYABLE:SEWER		775.84	
50-2601000	NET PENSION LIABILITY		394,327.88	
50-2602000	DEFFERRED OUTFLOWS - PENSION		29,245.78	
50-2611000	DEFFERRED SEWER GRANT $653,376		357,989.06	
	TOTAL LIABILITIES			7,886,455.64
	FUND EQUITY			
50-2890000	CONTRIBUTED CAPITAL		83,579.56	
50-2894000	RESTRICTED UTILITY BOND RESERV		248,931.55	
	UNAPPROPRIATED FUND BALANCE:			
50-2980000	BEGINNING OF YEAR	21,184,949.96		
	REVENUE OVER EXPENDITURES - YTD	(228,819.68)		
	BALANCE - CURRENT DATE		20,956,130.28	
	TOTAL FUND EQUITY			21,288,641.39
	TOTAL LIABILITIES AND EQUITY			29,175,097.03

VERNAL CITY CORPORATION
REVENUES WITH COMPARISON TO BUDGET
FOR THE 10 MONTHS ENDING APRIL 30, 2020

VERNAL CITY UTILITIES FUND

		PERIOD ACTUAL	YTD ACTUAL	BUDGET	UNEARNED	PCNT
	WATER - OPERATING					
50-371-3701	METERED SALES-RESIDENTIAL	125,506.93	1,533,387.81	1,750,000.00	216,612.19	87.6
50-371-3702	METERED SALES-COMMERCIAL	36,043.10	608,576.89	750,000.00	141,423.11	81.1
50-371-3703	SERVICE FEES	.00	2,800.00	2,000.00	(800.00)	140.0
50-371-3704	DELINQUENT PENALTIES	(1.22)	11,577.43	15,000.00	3,422.57	77.2
50-371-3705	BULK WATER SALES	1,005.38	16,681.88	20,000.00	3,318.12	83.4
50-371-3706	MISCELLANEOUS REVENUE	140.00	3,485.00	5,000.00	1,515.00	69.7
50-371-3709	A V W S D WATER OVERAGE	.00	2,918.25	.00	(2,918.25)	.0
	TOTAL WATER - OPERATING	162,694.19	2,179,427.26	2,542,000.00	362,572.74	85.7
	WATER - NON-OPERATING					
50-372-3711	INTEREST EARNINGS	4,055.01	64,798.89	50,000.00	(14,798.89)	129.6
50-372-3713	IMPACT FEES	.00	10,250.00	10,000.00	(250.00)	102.5
50-372-3726	JOINT WATER 2000 W PAYMNT	.00	7,980.00	7,980.00	.00	100.0
	TOTAL WATER - NON-OPERATING	4,055.01	83,028.89	67,980.00	(15,048.89)	122.1
	SEWER - OPERATING					
50-373-3731	SEWER CHARGES - RESIDENTAL	111,082.85	1,110,728.75	1,300,000.00	189,271.25	85.4
50-373-3732	SEWER CHARGES - COMMERCIAL	35,769.97	431,633.75	535,000.00	103,366.25	80.7
	TOTAL SEWER - OPERATING	146,852.82	1,542,362.50	1,835,000.00	292,637.50	84.1
	SEWER - NON-OPERATING					
50-374-3741	INTEREST EARNINGS	431.31	6,892.32	6,500.00	(392.32)	106.0
50-374-3745	IMPACT FEES	.00	13,500.00	12,000.00	(1,500.00)	112.5
50-374-3756	JOINT SEWER 2000 W PAYMNT	.00	6,270.00	6,300.00	30.00	99.5
	TOTAL SEWER - NON-OPERATING	431.31	26,662.32	24,800.00	(1,862.32)	107.5
	SOLID WASTE					
50-377-3771	RESIDENTIAL CHARGES	35,147.66	351,140.89	450,000.00	98,859.11	78.0
50-377-3774	GARBAGE CAN RENT	3,588.00	35,314.20	40,000.00	4,685.80	88.3
50-377-3776	RECYCLING PROGRAM - RECYCLOPS	230.00	2,190.00	1,000.00	(1,190.00)	219.0
	TOTAL SOLID WASTE	38,965.66	388,645.09	491,000.00	102,354.91	79.2
	TOTAL FUND REVENUE	352,998.99	4,220,126.06	4,960,780.00	740,653.94	85.1

VERNAL CITY UTILITIES FUND

		PERIOD ACTUAL	YTD ACTUAL	BUDGET	UNEXPENDED	PCNT
	WATER DEPARTMENT					
50-510-1103	PERM EMPLOYEES/ REG HOURS	23,700.80	268,669.89	332,000.00	63,330.11	80.9
50-510-1104	PERM EMPLOYEES/ OT HOURS	1,502.58	20,297.18	20,000.00	(297.18)	101.5
50-510-1311	LONG TERM DISABILITY	120.27	1,438.17	2,000.00	561.83	71.9
50-510-1313	F I C A	1,781.02	21,269.32	26,000.00	4,730.68	81.8
50-510-1314	RETIREMENT/ CITY FOR EMPLOYEE	4,382.74	52,187.02	60,000.00	7,812.98	87.0
50-510-1316	MEDICAL INSURANCE	9,226.60	90,658.70	115,000.00	24,341.30	78.8
50-510-1317	WORKERS COMP.	408.38	9,084.10	11,500.00	2,415.90	79.0
50-510-1318	STATE UNEMPLOYMENT	.00	2,863.82	3,000.00	136.18	95.5
50-510-2100	BOOKS, SUBSCRIPT, MEMBERSHIPS	.00	1,185.00	1,000.00	(185.00)	118.5
50-510-2200	PUBLIC NOTICES	.00	.00	600.00	600.00	.0
50-510-2300	TRAVEL	100.00	4,587.65	6,000.00	1,412.35	76.5
50-510-2400	OFFICE EXP, SUPPLIES, POSTAGE	290.81	3,824.62	5,300.00	1,475.38	72.2
50-510-2450	MERCHANT BANK FEE'S	1,478.48	14,199.08	12,000.00	(2,199.08)	118.3
50-510-2500	EQPMT: SUPPLIES & MAINTENANCE	2,595.16	18,598.01	12,000.00	(6,598.01)	155.0
50-510-2700	UTILITIES	262.58	2,757.84	2,700.00	(57.84)	102.1
50-510-2800	TELEPHONE	402.33	3,645.07	5,000.00	1,354.93	72.9
50-510-2900	FUEL	669.93	7,309.75	7,000.00	(309.75)	104.4
50-510-3000	TREATED WATER COST	.00	568,058.83	650,000.00	81,941.17	87.4
50-510-3100	PROFESSIONAL SERVICES	.00	13,570.00	12,000.00	(1,570.00)	113.1
50-510-3105	METERS ANNUAL SUPPORT	.00	12,913.64	.00	(12,913.64)	.0
50-510-3110	CONTRACTED LINE REPAIRS	.00	20,559.51	10,000.00	(10,559.51)	205.6
50-510-3120	LEAD/COPPER SAMPLES	.00	1,158.13	3,200.00	2,041.87	36.2
50-510-4503	WATER DEPOSIT INTEREST	3.08	21.02	100.00	78.98	21.0
50-510-4504	SPECIAL WATER SUPPLIES	(149,142.98)	99,731.99	110,000.00	10,268.01	90.7
50-510-4506	WATER ASSESSMENTS & PURCHASES	1,117.13	33,527.66	27,000.00	(6,527.66)	124.2
50-510-4507	RED FLEET WATER: PUMPING COST	.00	16,440.75	13,000.00	(3,440.75)	126.5
50-510-4508	BLOCK NOTICE J.U. - RED FLEET	.00	84,770.00	84,800.00	30.00	100.0
50-510-4509	UWCD - J.U. ADDT WATER	.00	102,900.00	102,900.00	.00	100.0
50-510-4510	TYZACK REACH III REPAYMENT	.00	10,657.57	10,700.00	42.43	99.6
50-510-4511	THE DAM EXPENSE	.00	.00	25,000.00	25,000.00	.0
50-510-4521	UNIFORMS	453.95	2,667.61	3,000.00	332.39	88.9
50-510-4535	BLUE STAKES	145.79	1,134.28	1,000.00	(134.28)	113.4
50-510-4550	SOFTWARE UPGRADES	.00	1,695.00	2,500.00	805.00	67.8
50-510-4580	WEB SITE	.00	2,000.00	2,000.00	.00	100.0
50-510-4710	INDIRECT SERVICES	50,500.00	505,000.00	606,000.00	101,000.00	83.3
50-510-4765	BAD DEBT EXPENSE	.00	106.39	5,000.00	4,893.61	2.1
50-510-5501	WATER MASTER PLAN UPDATE	311.00	61,851.00	.00	(61,851.00)	.0
50-510-5503	ASHLEY SPRINGS SECURITY	.00	.00	40,000.00	40,000.00	.0
50-510-5507	RADIO READ METERS	155,338.66	155,338.66	.00	(155,338.66)	.0
50-510-6019	DRINKING WATER BOND PRINCIPLE	.00	16,000.00	17,000.00	1,000.00	94.1
50-510-6022	U.W.C.D. CIB STORAGE TANK	.00	4,912.50	5,000.00	87.50	98.3
50-510-6029	DRINKING WATER BOND INTEREST	.00	719.39	700.00	(19.39)	102.8
50-510-6127	WATER REV BOND SERIES 2002 INT	.00	7,824.00	8,000.00	176.00	97.8
50-510-6128	WATER BOND SERIES 2002 PRINCLE	.00	42,000.00	42,000.00	.00	100.0
50-510-6130	C.I.B 2009 REVENUE BOND	.00	14,000.00	14,000.00	.00	100.0
50-510-6131	C.I.B 2009B REVENUE BOND	.00	26,000.00	26,000.00	.00	100.0
50-510-6132	C.I.B 2012 REVENUE BOND	.00	174,000.00	174,000.00	.00	100.0
50-510-6134	C.I.B 2014 REVENUE BOND	.00	16,000.00	16,000.00	.00	100.0
50-510-6136	C.I.B 2016 REVENUE BOND	.00	9,000.00	9,000.00	.00	100.0
	TOTAL WATER DEPARTMENT	105,648.31	2,527,133.15	2,641,000.00	113,866.85	95.7

VERNAL CITY CORPORATION
EXPENDITURES WITH COMPARISON TO BUDGET
FOR THE 10 MONTHS ENDING APRIL 30, 2020

VERNAL CITY UTILITIES FUND

		PERIOD ACTUAL	YTD ACTUAL	BUDGET	UNEXPENDED	PCNT
	SEWER DEPARTMENT					
50-520-1103	PERM EMPLOYEES/ REG HOURS	7,356.80	80,497.41	98,000.00	17,502.59	82.1
50-520-1104	PERM EMPLOYEES/ OT HOURS	192.45	2,838.69	5,000.00	2,161.31	56.8
50-520-1311	LONG TERM DISABILITY	35.22	420.74	700.00	279.26	60.1
50-520-1313	F I C A	508.16	5,815.80	8,000.00	2,184.20	72.7
50-520-1314	RETIREMENT/CITY FOR EMPLOYEES	1,253.24	15,044.20	18,200.00	3,155.80	82.7
50-520-1316	MEDICAL INSURANCE	3,222.12	32,141.27	43,800.00	11,658.73	73.4
50-520-1317	WORKERS COMP.	122.32	2,666.44	5,000.00	2,333.56	53.3
50-520-2100	BOOKS, SUBSCRIPT, MEMBERSHIPS	.00	685.00	600.00	(85.00)	114.2
50-520-2300	TRAVEL	100.00	736.35	1,500.00	763.65	49.1
50-520-2400	OFFICE EXP, SUPPLIES, POSTAGE	286.30	3,745.32	5,000.00	1,254.68	74.9
50-520-2500	EQPMT: SUPPLIES & MAINTENANCE	9.51	536.32	5,000.00	4,463.68	10.7
50-520-2900	FUEL	61.86	2,162.79	3,000.00	837.21	72.1
50-520-3100	PROFESSIONAL SERVICES	.00	480.00	1,500.00	1,020.00	32.0
50-520-4514	SPECIAL SEWER SUPPLIES	2,664.99	19,186.52	18,000.00	(1,186.52)	106.6
50-520-4515	SEWER LINE CONTRACTED REPAIR	.00	.00	5,000.00	5,000.00	.0
50-520-4517	SEWER MANAGEMENT BOARD M & O	77,575.93	803,550.84	960,000.00	156,449.16	83.7
50-520-4521	UNIFORMS	.00	721.89	950.00	228.11	76.0
50-520-4710	INDIRECT SERVICES	30,000.00	300,000.00	360,000.00	60,000.00	83.3
50-520-5002	SEWER MAIN LINE CAMERA	.00	64,840.69	70,000.00	5,159.31	92.6
50-520-5503	REHABILITATE SEWER LINES	91,237.72	106,669.72	.00	(106,669.72)	.0
50-520-5505	CONTRACT CLEANING SEWER LINES	.00	2,110.00	70,000.00	67,890.00	3.0
50-520-6012	W Q: SEWER INSP BOND PRINCIPLE	.00	9,000.00	9,000.00	.00	100.0
50-520-6122	W Q: SEWER INSP BOND INTEREST	.00	1,330.00	1,500.00	170.00	88.7
50-520-6123	SEWER BOND CIB 2002 B	.00	35,000.00	35,000.00	.00	100.0
50-520-6126	SEWER BOND CIB 2006	.00	35,000.00	35,000.00	.00	100.0
50-520-6127	SEWER BOND 2009 PYMNT	.00	11,000.00	11,000.00	.00	100.0
50-520-6128	SEWER BOND 2016 PYMNT	.00	22,000.00	22,000.00	.00	100.0
	TOTAL SEWER DEPARTMENT	214,626.62	1,558,179.99	1,792,750.00	234,570.01	86.9
	SOLID WASTE DEPARTMENT					
50-570-2200	PUBLIC NOTICES	.00	.00	100.00	100.00	.0
50-570-2400	OFFICE EXP, SUPPLIES, POSTAGE	286.31	3,745.38	4,500.00	754.62	83.2
50-570-3100	PROFESSIONAL SERVICES	32,435.36	323,534.22	435,000.00	111,465.78	74.4
50-570-4531	RECYCLING PROGRAM EXPENSE	500.00	4,500.00	6,000.00	1,500.00	75.0
50-570-4535	RECYCLOPS EXPENSE	195.50	1,853.00	1,000.00	(853.00)	185.3
50-570-4710	INDIRECT SERVICE	3,000.00	30,000.00	36,000.00	6,000.00	83.3
	TOTAL SOLID WASTE DEPARTMENT	36,417.17	363,632.60	482,600.00	118,967.40	75.4
	TOTAL FUND EXPENDITURES	356,692.10	4,448,945.74	4,916,350.00	467,404.26	90.5
	NET REVENUE OVER EXPENDITURES	(3,693.11)	(228,819.68)	44,430.00	273,249.68	(515.0)

VERNAL CITY CORPORATION
BALANCE SHEET
APRIL 30, 2020

PAYROLL FUND

ASSETS

64-1190000	CASH: ALLOC FROM GEN'L FUND	(170,628.40)	
64-1311000	ACCOUNTS RECEIVABLE	2,217.90	
	TOTAL ASSETS		(168,410.50)

LIABILITIES AND EQUITY

LIABILITIES

64-2131000	ACCOUNTS PAYABLE	(107,145.14)	
64-2221000	FEDERAL WITHHOLDING PAYABLE	2.00	
64-2222000	STATE WITHHOLDING PAYABLE	7,040.00	
64-2224000	HEALTH INSURANCE PAYABLE	2,167.22	
64-2228000	RETIREMENT PAYABLE:STATE OF UT	(454.30)	
64-2229000	STATE INSURANCE FUND PAYABLE	28,983.45	
64-2230000	HEALTH INSURANCE PAYABLE VRI	(357.00)	
64-2233000	LONG TERM DISABILITY PAYABLE	(56.37)	
64-2234000	MOUNTAIN AMERICA CREDIT UNION	25.00	
64-2238000	RETIREMENT PAYABLE ICMA 401	(49.11)	
64-2244000	UTILITY BILL P/R DED PAYABLE	291.10	
64-2248000	CITY HSA CONTRIBUTION	(43,375.00)	
64-2250000	ACCRUED PAYROLL/TAXES PAYABLE	115,125.09	
	TOTAL LIABILITIES		2,196.94
	TOTAL LIABILITIES AND EQUITY		2,196.94

VERNAL CITY CORPORATION
BALANCE SHEET
APRIL 30, 2020

TRUST AND AGENCY FUND

	ASSETS		
71-1111000	JUSTICE COURT TRUST ACCOUNT	2,206.64	
71-1112000	SEC 125 TRUST ACCOUNT	5,636.77	
71-1190000	CASH-ALLOC TO OTHER FUNDS	2,517.06	
	TOTAL ASSETS		10,360.47
	LIABILITIES AND EQUITY		
	FUND EQUITY		
71-2971000	RESERVED COURT TRUST FUNDS	5,625.84	
71-2972000	RESERVED SEC 125 PLAN FUNDS	144.37	
	TOTAL FUND EQUITY		5,770.21
	TOTAL LIABILITIES AND EQUITY		5,770.21

VERNAL CITY CORPORATION
BALANCE SHEET
APRIL 30, 2020

GENERAL FIXED ASSETS

ASSETS

91-1611000	LAND	673,829.71	
91-1612000	WATER STOCK	23,194.96	
91-1613000	LAND - STREET EASEMENTS	365,720.39	
91-1621000	BUILDINGS	1,852,149.71	
91-1622000	ALLOW FOR DEPREC: BUILDINGS	(871,677.70)	
91-1631000	IMPROVEMENTS: OTHER THAN BLDGS	3,133,401.58	
91-1632000	ALLOW FOR DEPREC: OTHER BLDG	(1,752,272.14)	
91-1641000	OFFICE FURNITURE AND EQUIPMENT	1,685,845.25	
91-1642000	ALLOW FOR DEPREC:FURN & EQPMT	(1,389,250.35)	
91-1651000	MACHINERY AND EQUIPMENT	1,453,572.16	
91-1652000	ALLOW FOR DEPREC:MACH & EQPMT	(1,380,021.64)	
91-1661000	AUTOMOBILES AND TRUCKS	2,355,966.07	
91-1662000	ALLOW FOR DEPREC: AUTOS/TRUCKS	(2,234,716.05)	
91-1671000	INFRASTRUCTURE:SIDEWALK, C&G	3,940,625.67	
91-1671001	ALLOW FOR DEPREC: S C&G	(1,977,793.56)	
91-1672000	INFRASTRUCTURE: STORM WATER	5,185,887.37	
91-1672001	ALLOW FOR DEPREC: STORM WATER	(1,766,684.57)	
91-1673000	INFRASTRUCTURE: STREET IMPROV	14,651,866.72	
91-1673001	ALLOW FOR DEPREC: STREET IMP	(9,040,057.04)	
91-1802000	CONSOLIDATED DISPATCH	444,984.37	
91-1802001	ALLOW FOR DEPREC: CED	(444,984.37)	
91-1803000	NARCOTICS STRIKE FORCE	287,008.27	
91-1803001	ALLOW FOR DEPREC: UBNSF	(287,008.27)	
91-1810000	CITY/COUNTY PARK IRRIG PROJ	147,299.48	
91-1810001	ALLOW FOR DEPREC: PARKS & REC	(131,778.66)	
91-1843000	CIB BONDS PAYABLE: GOVT. RESRV	1,716,000.00	
	TOTAL ASSETS		16,641,107.36

LIABILITIES AND EQUITY

LIABILITIES

91-2541000	CIB BND PAYBLE:ST SERIES 2000A	182,000.00	
91-2542000	CIB BOND PABLE:ST SERIES 2001B	153,000.00	
91-2543000	CIB BOND PABLE: ST SERIES 2003	614,000.00	
91-2544000	2009 B WELLSFRGO - STORM DRAIN	767,000.00	
	TOTAL LIABILITIES		1,716,000.00

FUND EQUITY

	UNAPPROPRIATED FUND BALANCE:		
91-2980000	BEGINNING OF YEAR	20,829,422.64	
91-2985000	ADDITIONS - CURRENT YEAR	17,299,530.02	
91-2985500	DISPOSITIONS - CURRENT YEAR	(761,681.71)	
91-2986000	ACCUMULATIVE DEPRECIATION	(22,442,163.59)	
	REVENUE OVER EXPENDITURES - YTD		
	BALANCE - CURRENT DATE		14,925,107.36

VERNAL CITY CORPORATION
BALANCE SHEET
APRIL 30, 2020

GENERAL FIXED ASSETS

TOTAL FUND EQUITY	14,925,107.36
TOTAL LIABILITIES AND EQUITY	16,641,107.36